HEWLETT hp PACKARD

Service Manual

H/P Part No. 09100-90034

HEWLETT-PACKARD CALCULATOR

Models: 9100A
9100B

SERIALS PREFIXED
945-03675 – 9100A
938-02251 – 9100B

Page 73, Manual Backdating Changes adapts this manual to all prior serial prefixes.

Copyright Hewlett-Packard Company, 1971
P.O. Box 301, Loveland, Colorado, 80537 U.S.A.

TABLE OF CONTENTS

SECTIONS

INTRODUCTION 1

PSEUDO-HARDWARE PROBLEMS 2
9100A/B
Improper Magnetic Card Entry 2
Program Steps In Memory Changed to Y→( ) or ACC + ... 2
Incorrect Polar Conversion 7
Pressing Two Keys Simultaneously 7
Ambiguous Equality 8
Incorrect Int X Key Operation 8
Display Changes If An "IF" Key Is Pressed 8

9100A
Incorrect Program Step Loaded Into Memory From Magnetic Card 9
Keyboard Digit Entry Becomes A Part of the Number In the X Register 10
Program Execution Starts When STEP PRGM Is Pressed 10
Turning Calculator On Lights Error Lamp 11

9100B
Unusual Z Register Display 12
Unexpected Results Obtained From Operations Following "IF" Instructions 13
Unexpected Results Obtained From A GO TO ( ) ( ) Instruction 13
Keystrokes Do Not Appear In X 14
Subroutine Called From Keyboard Will Not Return Control to Main Program 14
Pressing STEP PRGM Causes Multiple Key Execution 14

PERFORMANCE ASSURANCE 15

TROUBLESHOOTING
Step 1 Verify the Problem 25
Step 2 Check the CRT 25
Step 3 Troubleshooting Tree 26
The Intermittent Calculator 26
Field Repairable Assemblies 27
Modified Calculators 27
Interchangeable Assemblies 27
A20 Power Supply Replacement 28

REPLACEABLE PARTS ..... 5?

BACKDATING 73

TABLE OF CONTENTS

APPENDIX A
9100A Diagnostic Program

APPENDIX B
9100B Diagnostic Program

APPENDIX C
Code List of Manufacturers

APPENDIX D
Sales and Service Offices

TABLES

1. Assembly Mounting Screws 16

ILLUSTRATIONS

1. The 9100A's 19 Accessible Registers 3
2. Display of Register X, Y or Z 4
3. A Program Recorded On A Magnetic Card 9
4. Location of Assembly Mounting Screws 15
5. Keyboard Bezel Mounting Screws 16
6. A5 and A40 Assembly Mounting Screws 17
7. Assemblies of the 9100A/B 18
8. Service Chain Installation 19
9. The A20A2 Assembly 20
. A Properly Adjusted CRT Display 21
11. Original Bottom Case Configuration 29
12. First Configuration for Bottom Case With 115/230V Power Outlet ... 30
13. Second Configuration for Bottom Case With 115/230V Power Outlet . 30
14. Third Configuration for Bottom Case With 115/230V Power Outlet .. 30
15. Checking the Bottom Assembly 31/32
16. Troubleshooting Tree 33
17. Standard Vertical Deflection Amplifier Waveforms 34
18. Standard Vertical Deflection Amplifier Schematic 35
19. Standard Horizontal Deflection Amplifier Waveforms 36
20. Standard Horizontal Deflection Amplifier Schematic 37/38
21. Composite Standard Horizontal and Vertical Deflection Waveforms .. 39
22. −3500 Volt Power Supply Oscillator 40
23. Standard −15V and −3500V Power Supply Schematic 41/42
24. Optional (Current) Vertical Deflection Amplifier 43/44
25. Optional (Current) Horizontal Deflection Amplifier Schematic ... 45/46
26. −3500V and Optional (Voltage and Current) −15V Power Supply Schematic 47/48
27. Optional (Voltage) Vertical Deflection Amplifier Schematic 49/50
28. Optional (Voltage) Horizontal Deflection Amplifier Schematic ... 51/52
29. 9100A/B Common Parts 59
30. Unique 9100A and 9100B Parts 60

This manual contains the field service information required to maintain the Hewlett-Packard Models 9100A and 9100B Calculators. The similarity of the instruments and their service concept allows this information to be included in one manual. In this manual, the terms "9100A/B" and "calculator" will refer (unless otherwise noted) to either the 9100A or 9100B Calculator.

SERVICE CONCEPT

The 9100A/B Calculator is maintained with a service kit. The service kit (available in several versions; see REPLACEABLE PARTS) provides the Field Service Engineer with the tools and parts necessary for maintaining the calculator in a field situation.

The 9100A/B is repaired by exchanging good assemblies from the kit for defective assemblies in the calculator. When the calculator is restored to use, any defective assembly is returned to the nearest Hewlett-Packard Sales and Service Office for exchange. Four assemblies are repaired in the field to component level; they are the horizontal and vertical deflection assemblies (A15 and A16, respectively) and the power supply assemblies (A20 and A21).

2 PSEUDO-HARDWARE PROBLEMS

INTRODUCTION

Several operating characteristics of the 9100A/B Calculator could be interpreted as instrument malfunctions; therefore, the Field Service Engineer should ensure that an instrument malfunction exists prior to troubleshooting a calculator. This section will cover the most common pseudo-hardware of the A/B, A and B, respectively.

9100A/B

IMPROPER MAGNETIC CARD ENTRY

If the calculator's memory is unchanged except for core memory location 0-0 (or the starting address), which is changed to 77_8, check to be sure the customer is not putting the magnetic card in backwards, that is, the printed side of the card toward the display bezel rather than toward the keyboard. If the card is put in the cardreader backward and the ENTER key is pressed, the read heads of the cardreader will have no data input; therefore, the program counter of the calculator will not be advanced. When the card is ejected from the cardreader, the read heads pick up the electrical noise of the card-eject switch and load an octal code 77 into the memory location 0-0 (or the starting address). The same symptom will be observed if an unrecorded or accidentally erased magnetic card is used.

PROGRAM STEPS IN MEMORY CHANGED TO Y→( ) OR ACC+

If, after one pass through a program, a register (or registers) previously containing program steps now contains Y→( ) or ACC + instructions (octal codes 40 and 60 respectively), check to be sure that the program has not loaded data in registers that previously contained program steps.

The explanation of why octal code 40 and 60 are predominate in this situation begins with the core memory and ends with the display. Throughout the following discussion the 9100A will be used as an illustration, but the material applies equally to the 9100B (unless otherwise stated).

The core memory of the calculator (See Figure 1) contains 19 accessible registers (0-9, a-f, X, Y, Z). (The 9100B also has an additional negative page (−) containing registers (−)0-9, (−)a-f.) The registers contain 14 characters, each character contains 6 bits (F20-F25).

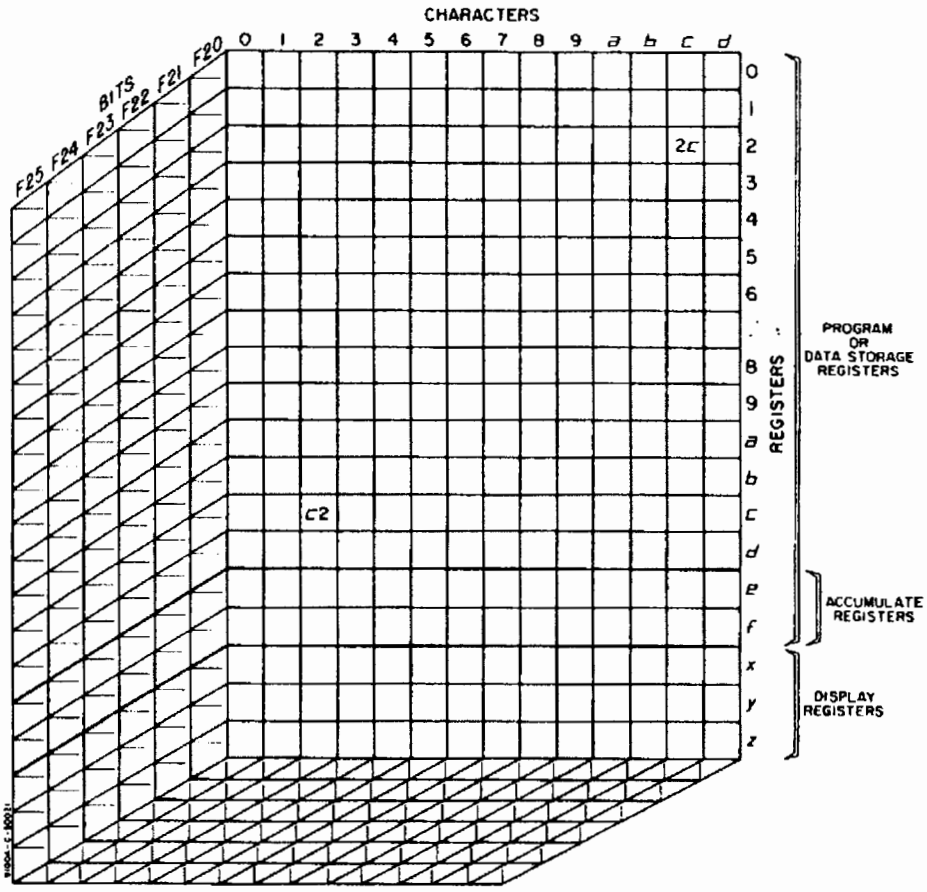

Figure 1. The 9100A's 19 Accessible Registers

Each character location will contain either an instruction or a digit. First, let's cover the situation of a character holding an instruction. The six bits are assigned the following octal weight:

BIT	F20	F21	F22	F23	F24	F25
OCTAL WEIGHT	1	2	4	10	20	40

A maximum of octal code 77 can be stored in a character, giving each character location the capability of storing any calculator instruction (see calculator pull-out card). The following chart contains examples of a character storing different calculator instructions.

PROGRAM STEPS IN MEMORY CHANGED TO Y→( ) OR ACC+ (Continued)

	F20	F21	F22	F23	F24	F25	BITS
	1	2	4	10	20	40	OCTAL WEIGHT
KEYS							TOTAL OCTAL WEIGHT
ACC+	0	0	0	0	1	1	60
STOP	1	0	0	0	0	1	41
$\sqrt{X}$	0	1	1	1	1	1	76
PAUSE	1	1	1	1	0	1	57

NOTE

The octal code 77 is not required for a keyboard instruction, but is used as an internal calculator instruction (In 10). (In the 9100B octal code 77 is the SUB RETURN instruction.)

When a character contains a digit rather than an instruction, only bits F20, F21, F22 and F23 are required to define that digit. Bits F24 and F25 contain the sign and blanking information. If bit F24 is a one, the digit is negative. If bit F25 is a one, the digit is blanked.

DIGIT	F20	F21	F22	F23	F24	F25	BITS	BLANKED	±
	1	2	4	10	20	40	OCTAL WEIGHT		
							TOTAL OCTAL WEIGHT		
1	1	0	0	0	1	0	21	NO	–
3	1	1	0	0	0	0	3	NO	+
5	1	0	1	0	1	0	25	NO	–
7	1	1	1	0	0	0	7	NO	+
9	1	0	0	1	1	0	31	NO	–

The CRT display is stored in the X, Y, and Z registers. The display of one of these registers in floating point is shown in Figure 2. It consists of ten digits (D_9 --- D_0), two exponent digits (E_1 and E_0) and two guard digits (G_1 and G_0), which are always blanked. The two guard digits perform the function of rounding.

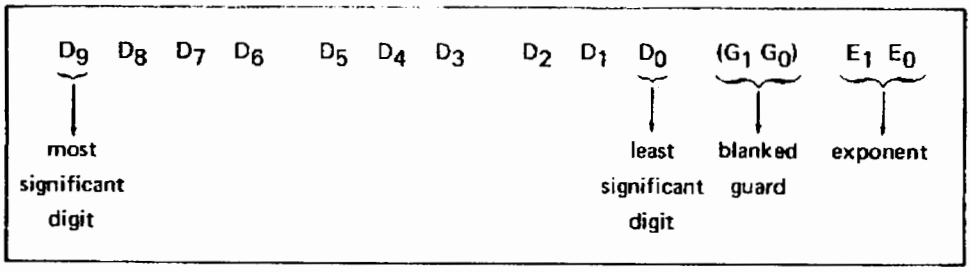

Figure 2. Display of Register X, Y or Z

If the CRT display in Figure 2 were being held in any register, it would be held in the following manner:

Register	X0	X1	X2	X3	X4	X5	X6	X7	X8	X9	Xa	Xb	Xc	Xd
Display	D_0	D_1	D_2	D_3	D_4	D_5	D_6	D_7	D_8	D_9	E_0	E_1	G_0	G_1

This can be demonstrated in the following manner:

SET:	RUN		
PRESS:	1	PRESS:	6
"	2	"	7
"	3	"	X→( )
"	4	"	9
"	5	"	GO TO ( ) ( )
"	6	"	9
"	7	"	0
"	8	SET:	PROGRAM
"	9		
"	0		
"	7		
"	8		
"	ENT EXP		

NOTE
For a 9100B, use the (+) page for all examples.

Pressing the STEP PRGM key will cause the contents of the 9 register to be displayed one character at a time in octal form.

Character	9-0	9-1	9-2	9-3	9-4	9-5	9-6	9-7	9-8	9-9	9-a	9-b	9-c	9-d
Octal	00	11	10	07	06	05	04	03	02	01	07	06	10	07
Decimal	0	9	8	7	6	5	4	3	2	1	7	6	8	7
Display	D_0	D_1	D_2	D_3	D_4	D_5	D_6	D_7	D_8	D_9	E_0	E_1	G_0	G_1

This procedure loaded 12 significant digits into the 9 register. The demonstration for a partial display produces quite different results:

SET:	RUN
PRESS:	1
"	2
"	3
"	X→( )
"	9
"	GO TO ( ) ( )
"	9
"	0
SET:	PROGRAM

9100A/B

PROGRAM STEPS IN MEMORY CHANGED TO Y→( ) OR ACC + (Continued)

The STEP PRGM key will display the contents of the 9 register in octal form one character at a time.

Register Location	9-0	9-1	9-2	9-3	9-4	9-5	9-6	9-7	9-8	9-9	9-a	9-b	9-c	9-d
Octal	40	40	40	40	40	40	40	03	02	01	02	00	40	40
Decimal	-	-	-	-	-	-	-	3	2	1	2	0	-	-
Display	D_0	D_1	D_2	D_3	D_4	D_5	D_6	D_7	D_8	D_9	E_0	E_1	G_0	G_1

In this example the octal code 40 is predominant, meaning an insignificant zero which is blanked. Storing a negative number produces slightly different results.

SET:	RUN
PRESS:	1
"	2
"	3
"	CHG SIGN
"	X→( )
"	9
"	GO TO ( ) ( )
"	9
"	0
SET:	PROGRAM

The STEP PRGM key will display the contents of the 9 register in octal form, one character location at a time.

Register Location	9-0	9-1	9-2	9-3	9-4	9-5	9-6	9-7	9-8	9-9	9-a	9-b	9-c	9-d
Octal	40	40	40	40	40	40	40	03	02	21	02	00	40	40
Decimal	-	-	-	-	-	-	-	3	2	1	2	0	-	-
Display	D_0	D_1	D_2	D_3	D_4	D_5	D_6	D_7	D_8	D_9	E_0	E_1	G_0	G_1

In this example the octal code in location 9-9 contains a twenty bit, which means that the number is negative. If the CHG SIGN had been pressed first, still another example of a negative entry would have occurred.

SET:	RUN		
PRESS:	CHG SIGN	PRESS:	9
"	1	"	0
"	2	SET:	PROGRAM
"	3		
"	X→( )		
"	9		
"	GO TO ( ) ( )		

9100A/B

The STEP PRGM key will display the contents of the 9 register in octal form, one character location at a time.

Register Location	9-0	9-1	9-2	9-3	9-4	9-5	9-6	9-7	9-8	9-9	9-a	9-b	9-c	9-d
Octal	60	60	60	60	60	60	60	23	22	21	02	00	60	60
Decimal	-	-	-	-	-	-	-	3	2	1	2	0	-	-
Display	D_0	D_1	D_2	D_3	D_4	D_5	D_6	D_7	D_8	D_9	E_0	E_1	G_0	G_1

Pressing CHG SIGN first has loaded octal code 20's in all of the digits. If the digit was a blanked zero, it is an octal code 40; the two taken together result in octal code 60 which is a negative, blanked decimal zero.

Now, back to the problem. The operator complained that after one pass through the program, steps previously containing program steps now contain $Y \rightarrow ( )$ instructions (octal code 40) or ACC + instructions (octal code 60). If he has stored a positive number with insignificant zeros over the register containing program steps, he has octal code 40's in the character locations that contain the insignificant zeros. If he has loaded a negative partial display over a register containing program steps, he has octal code 60's in the characters not containing digits.

INCORRECT POLAR CONVERSION

With zeros in the X and Y registers and the DEGREES - RADIANS switch in the DEGREES position, pressing TO POLAR will cause 90 and zero, respectively, to appear in the X and Y registers. Performing the same operation with the DEGREES - RADIANS switch in the RADIANS position will cause 1.570 796 326 00 and zero to appear in the Y and X registers. This occurs because of the algorithm used in the TO POLAR conversion, which is:

$$\text{ARC TAN } \frac{Y}{X} = \emptyset$$

If the X and Y registers contained zeros, the calculator would divide zero into zero and obtain the instrument's interpretation of infinity (9.999 999 999 99). The ARC TAN of 9.999 999 999 99 is 90 degrees. 90 degrees in radians is 1.570 796 326 00.

PRESSING TWO KEYS SIMULTANEOUSLY

Pressing two keys simultaneously will result in any of three occurrences:

1. The number in the X register will not change.
2. Either key may be entered in the X register.
3. Zeros will be entered in the X register.

This is normal operation and requires no service action.

9100A/B

AMBIGUOUS EQUALITY

The "IF" instructions compare all twelve digits (i.e. ten displayed digits and two guard digits) and the two-digit exponent, of the numbers in the X and Y registers when testing for the condition indicated. However, if a number consists of digit nine (9) in the first eleven places and (one of digits) five (5) through nine (9) in the twelfth place, then that number is considered to be equal to the next higher (more positive) power of ten.

For example,
9.999 999 999 9(5 thru 9) x $10^2 = 10^3$
similarly,
9.999 999 999 9(5 thru 9) x $10^{-2} = 10^{-1}$

Despite their equality to the next higher power of ten, those numbers which have unequal digits only in the twelfth place are not considered to be equal to each other.

For example:
9.999 999 999 95 x 10^2 is not equal to
9.999 999 999 96 x 10^2.

INCORRECT INT X KEY OPERATION

The rounding performed on the calculator display when the FLOATING--FIXED POINT switch is in the FIXED POINT position could lead an operator to believe the INT X key is not functioning properly. For example, placing the number 5.9 in the X register and setting the DECIMAL DIGITS to 0 will cause the calculator to display six (6). If the INT X key is then pressed, the display will change to five (5). This occurs because the FLOATING--FIXED POINT switch affects only the calculator display, not the number stored in the calculator's internal register (which is always in floating notation). Even though the calculator was displaying six (6), the internal registers were carrying the number as 5.9. When INT X was pressed the decimal part of the number (stored in the internal registers) was dropped, causing the calculator to display five (5).

DISPLAY CHANGES IF AN "IF" KEY IS PRESSED

Pressing an "IF" key when a calculator is not running a program may cause the program counter to change location and, occasionally, may result also in a change of the display. This will occur because the calculator will process the key as though it were in a program and (depending on which "IF" key was pressed and the program steps in the memory) process the next two instructions in the calculator's memory or branch to the third following step and process it. The rule of thumb is: any "IF" key executed in this manner, will be executed as though the instruction were in the memory and encountered using the STEP PRGM key.

INCORRECT PROGRAM STEP LOADED INTO MEMORY FROM MAGNETIC CARD

If incorrect program steps (classically, octal code 77) are being loaded into the core memory (say, in the area of steps 2-1 thru 2-7) from a magnetic card, the program on the card may not have an END instruction. Some knowledge of the magnetic card reader operation is required to explain how this can happen.

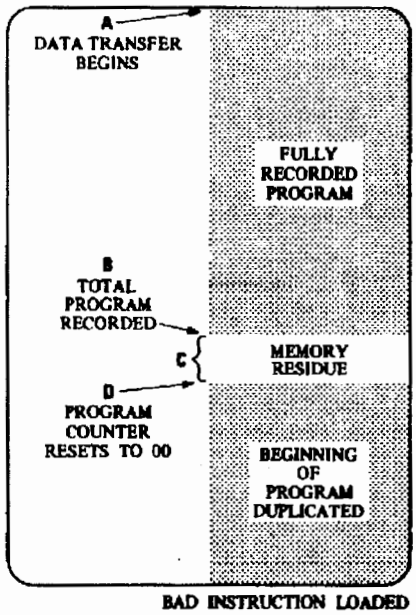

Figure 3. A Program Recorded On A Magnetic Card

When a magnetic card is recorded, the data transfer begins at point A in fig. 3. The program is fully recorded on the card at point B in fig. 3, but the recording will continue until the card is ejected. At C the unused memory is being recorded. At D the program counter reaches d-d and resets to 0-0. The recording process is uninterrupted and the beginning of the program is recorded again.

When a magnetic card is entered in the calculator, the data transfer begins at point A (see Figure 3). The program is fully entered in the calculator memory at point B. At this time, had there been an END instruction on the magnetic card, the cardreader heads would stop reading the magnetic card. If, however, there were no END instruction, the cardreader heads would continue reading the balance of the card. At D, the program counter reaches d-d and resets to 0-0 and the cardreader heads continue reading the card. At the end of the magnetic card, as it is ejected from the cardreader, circuit switches, which sense the presence of the magnetic card in the cardreader, close. The cardreader heads, which are still sensitive, pick up the electrical noise of the circuit switches' closure and transfer a bad instruction to the calculator memory.

9100A

KEYBOARD DIGIT ENTRY BECOMES A PART OF THE NUMBER IN THE X REGISTER

The following instructions do not terminate a preceding digit entry in the 9100A:

IF FLAG

SET FLAG

PAUSE

END

CHG SIGN

•

ENTER EXP

This characteristic of the 9100A operation can yield several different pseudo-hardware problems. For example, here is one:

> During diagnostic program execution, the PAUSE key is held pressed. When the program stops, there will be a three (3) in the X register. If the digit key five (5) is pressed the X register will contain thirty-five (35).

The way around this "problem" is, prior to making a digit entry, press any key that will terminate digit entry, such as CLEAR X.

PROGRAM EXECUTION STARTS WHEN STEP PRGM IS PRESSED

Any of the following instructions will initiate automatic program execution if they are encountered in the calculator memory with the STEP PRGM key when the calculator is in the RUN mode:

CONTINUE

PRINT/SPACE

FMT

CONTINUE - When STEP PRGM is pressed at this instruction the CONTINUE will override the STEP PRGM condition and automatically continue execution of the program.

FMT and PRINT/SPACE - Both of these instructions are used to control peripheral equipment. When a program is running, the program stops at these instructions and waits for a "continue" signal from the peripheral equipment before continuing with the program. In the RUN mode, when STEP PRGM is pressed at either of these instructions, the "continue" signal from the peripheral equipment will cause the program to continue running.

To overcome the above situations:

1. Using the STEP PRGM key, step to (not through) the particular instruction.
2. Manually branch (using the GO TO) around the instruction (be sure to also branch around the instruction associated with a FMT).
3. Manually key the instructions that were skipped.

TURNING CALCULATOR ON LIGHTS ERROR LAMP

The error lamp being lit when the calculator is switched ON is a normal operation and should be of no concern; provided, the light can be reset by pressing any key on the calculator keyboard.

9100B

UNUSUAL Z REGISTER DISPLAY

Occasionally, when the PROGRAM - RUN switch is set to PROGRAM, an unusual display may appear in the Z register. This may consist of a random number between the address and the octal code; alternatively, an improper address or octal code, consisting of more than two digits, may appear. This display is the transfer vectors stored in the instrument when a subroutine is called. To clear it, switch to RUN and press the SUB/RETURN key; then, readdress the program counter to the required address and switch back to PROGRAM.

UNEXPECTED RESULTS OBTAINED FROM OPERATIONS FOLLOWING "IF" INSTRUCTIONS

The four conditional keys (IF FLAG, IF X < Y, IF X = Y, IF X > Y) are specifically intended to be followed by a branching address; therefore, in a few cases, unexpected results will be obtained if operational keys are substituted for the branching address. The following is a list of precautions that must be observed when using certain operational keys following "IF" keys.

Applicable to all four "IF" keys when the condition is met.

1. IF X = Y
   CHG SIGN

   Regardless of the steps preceding the "IF", changes the sign of the exponent of the number in X. The sign of the number remains unchanged.

2. IF X = Y
   ●
   1

   If the program steps are on the (+) page: .1 → X

   If the program steps are on the (–) page: –.1 → X

3. IF X = Y
   RCL

   The contents of (+) F are recalled to X, but the Y register remains unchanged; also, the program counter branches to a random address.

Pages cannot be crossed without care. Any of the instructions listed below, if contained in the step following the "IF", constitute the start of an address so that the next two steps must contain the remainder of the address:

SUB/RETURN

+

–

any alphameric

A CONTINUE cannot be used as a "no operation" in the step after an "IF" instruction, if it is followed by any one of the following:

SUB/RETURN

+

—

any alphameric

This is because the CONTINUE does not clear the "GO TO" condition set up when an "IF" instruction is met. For example, assume the following program steps are executed and the IF X = Y instruction is met:

STEP	KEY
2	IF X=Y
3	CONT
4	—
5	3
6	7

The program counter will branch to (—)3-7. Had the IF X = Y instruction been failed, the number 37 would have been entered in the X register.

Applicable only to the IF FLAG instruction when the flag is not set.

STEP	KEY
2	ENTER EXP
3	6
4	IF FLAG
5	3
6	4
7	any alphameric

The "not met" IF FLAG does not reset the ENTER EXP instruction; this results in the alphameric character being entered as a digit of the exponent. If RCL is used in place of the alphameric, then the contents of F are recalled to X but nonsense appears in the Y register.

UNEXPECTED RESULTS OBTAINED FROM A GO TO ( ) ( ) INSTRUCTION

STEP	KEY
7	GO TO ( ) ( )
8	CHG SIGN
9	2
10	3

Will send the program counter to (+)2-3 if the program counter is on the (—) page and to (—)2-3 if the program counter is on the (+) page.

9100B

KEYSTROKES DO NOT APPEAR IN X

A 9100A program cannot be stopped (with the STOP key) during a GO TO ( ) ( ) instruction; the 9100B can. To see how this can create a pseudo-hardware problem, consider the following example:

STEP	KEY
1	CLEAR
2	1
3	+
4	PAUSE
5	GO TO ( ) ( )
6	0
7	2
8	END

If the program is started and STOP is pressed to stop the program, the following two manual keyboard entries may not appear in the X register. This is because the STOP key will not work during PAUSE (where this program spends most of its time). The GO TO ( ) ( ) requires the second longest execution time and since the STOP will work during the GO TO ( ) ( ), the odds are good that the STOP key will take effect there. If that is the case, the next two digit entry keystrokes are used to fill the "GO TO" address. If the STOP takes effect during any of the other program steps, the following digit entry keys will be entered in the X register. To avoid this situation, PRESS: STOP, STOP.

SUBROUTINE CALLED FROM KEYBOARD WILL NOT RETURN CONTROL TO MAIN PROGRAM

If the program counter is addressed from the keyboard to the starting address of a subroutine and the CONTINUE key is pressed, then after the subroutine is completed, the program will not return to the correct address. This occurs because the transfer vector (return address) was never stored. Normally, a subroutine is called during program execution, which is when the transfer vector is stored; subroutines addressed from the keyboard have no way of returning to the main program.

PRESSING STEP PRGM CAUSES MULTIPLE KEY EXECUTION

Occasionally, when in the RUN mode, pressing STEP PRGM once will cause several keys to be executed.

When STEP PRGM is pressed at a FMT instruction both the FMT and the next instruction will be executed as one instruction. The next time STEP PRGM is pressed, the second instruction after the FMT will be executed.

The IF FLAG. $X < Y$, $X = Y$, $X > Y$ will cause the program counter to branch immediately if the condition is not met and execute the third instruction following the qualifier.

This procedure should be performed whenever a service call is made to repair a defective calculator. In this procedure, the 9100A Calculator is used as an illustration, 9100B differences that are meaningful to the procedure are noted.

Equipment required:

Hewlett-Packard Model 427A or equivalent.
Calculator Service tool kit.

KEYBOARD REMOVAL

1. Turn the calculator power switch off and remove the power cable from the rear of the calculator.
2. Remove the two screws (four in the older models) from the bottom of the calculator and lift the cover of the calculator high enough to catch in the support latch near the back of the instrument.
3. Remove the screws (4) holding the keyboard (A in fig. 4), lift the keyboard out and disconnect the keyboard connectors (see fig. 5) from the calculator.

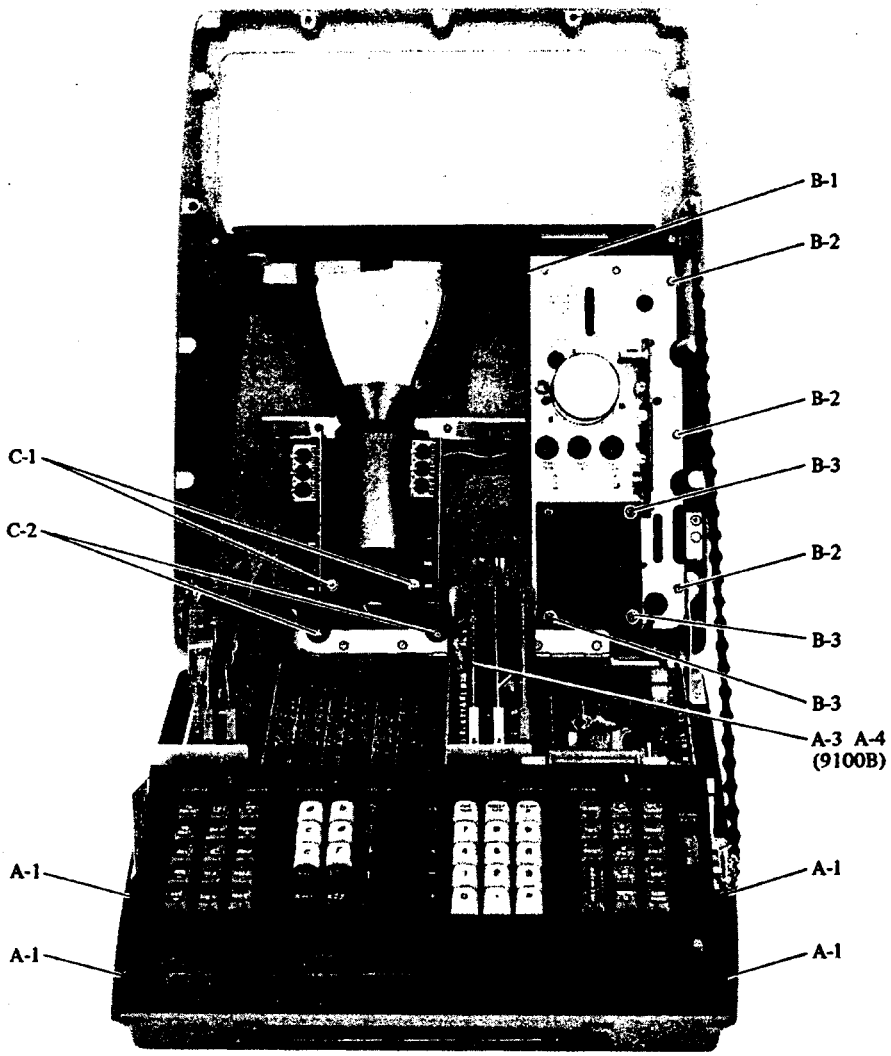

Figure 4. Location of Assembly Mounting Screws

KEYBOARD BEZEL REMOVAL

4. Remove the screws (3) holding the keyboard (D in fig. 5) and remove the bezel.
5. Remove accumulated dust and dirt from around the keys and thumbwheel switch.
6. Reinstall keyboard bezel.

KEYBOARD BOTTOM VIEW

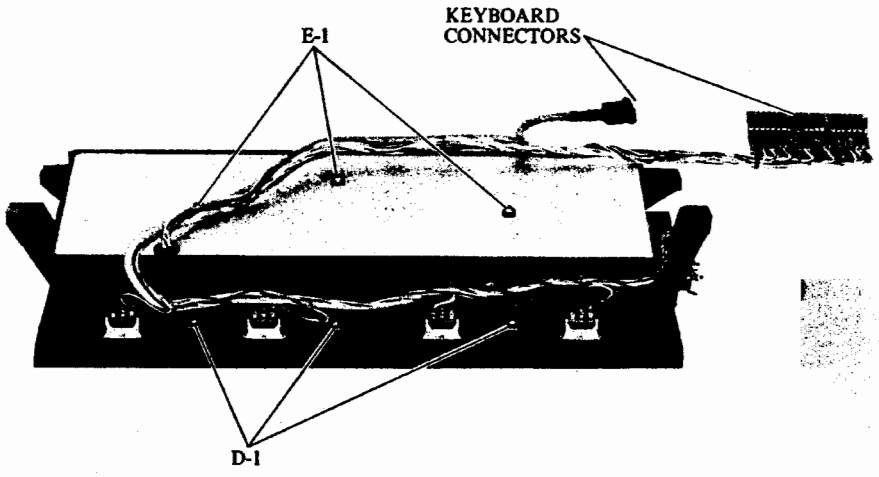

Figure 5. Keyboard Bezel Mounting Screws

ASSEMBLY MOUNTING SCREWS

Table 1. Assembly Mounting Screws

REF	QTY	HP PART NO.	DESCRIPTION	USE
A1	4 4	0624-0246 3050-0003	Screw: Hex 6-32 x 1/2 SelfTapping Washer: No. 6 Fiber	Keyboard
B-1	1	0624-0244	Screw: Hex 6-32 x 1/4	A20 Power Supply Ass'y
B-2	3	0624-0246	Screw: Hex 6-32 x 1/2 SelfTapping	
B-3	3 3 3 3	0624-0249 3050-0026 2190-0017 3050-0221	Screw: P/H pozi 6-32 x 1/2 Tapping Washer: Brass, .4375OD, .125ID Washer: No. 8 Lock Washer: Shoulder, Fiber, .172ID 3/8OD, .095thk	
C-1	2 2 2	2420-0002 3050-0066 2190-0918	Nut: Hex 6-32 x 1/4 Washer: No. 6 Flat Lockwasher: Helical Spg, Heavy	V1 Ass'y
C-2	2 2	0624-0248 3050-0278	Screw: Hex 8-32 x 3/4 SelfTapping Washer: No. 8 Fiber	
D-1	3 3 3	2200-0006 2190-0003 3050-0026	Screw: Common 4-40 x 3/8 Washer: No. 4 Lock Washer: No. 4 Flat	Keyboard Bezel
E-1	3 3	2360-0013 2190-0003	Screw: Common 6-32 x 1 Washer: No. 6 Flat	Keyboard Bottom Plate
	3	2190-0018	Washer: No. 6 Lock	
F-1	4	2360-0197	Screw: P/H pozi 6-32 x .375	Cardreader Ass'y
G-1	5	0624-0246	Screw: Hex 6-32 x 1/2	Bottom Ass'y
G-2	4	2360-0197	Screw: P/H pozi 6-32 x .375	

CARDREADER REMOVAL

7. Remove the screws (4) holding the cardreader (F in fig. 6), and lift the cardreader out.
8. Fold a 9160A input card in half lengthwise; saturate one end of the card with magnetic head cleaner (-hp- P/N 8500-0810) from the service kit. Slide the card in and out of the cardreader slot several times. Moisten a tissue with the head cleaner and clean the cardreader wheel. Tighten the set screw in the cam on the cardreader motor. Reinstall the cardreader.

CAUTION
THE CARDREADER MUST BE REMOVED FROM THE INSTRUMENT WHEN THE HEAD CLEANER IS USED BECAUSE IT WILL DISSOLVE THE PLASTIC BEZEL.

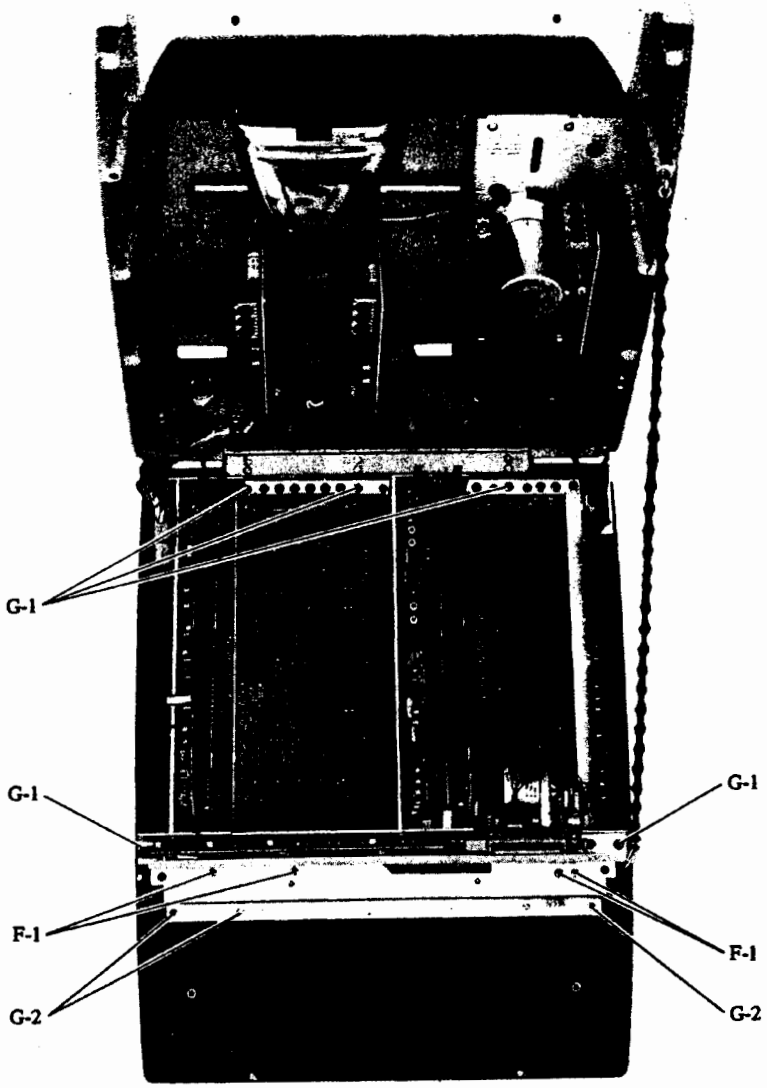

Figure 6. A5 and A40 Assembly Mounting Screws

9. Remove the A1, A2 (2), A3 and A4 (A1, A2 (2), A3-A4 for a 9100B) assemblies (see Fig. 7). Clean the connectors of each assembly and reinstall.

> **NOTE**
> The board pullers are color-keyed to match the card guides.

10. Reinstall the keyboard.

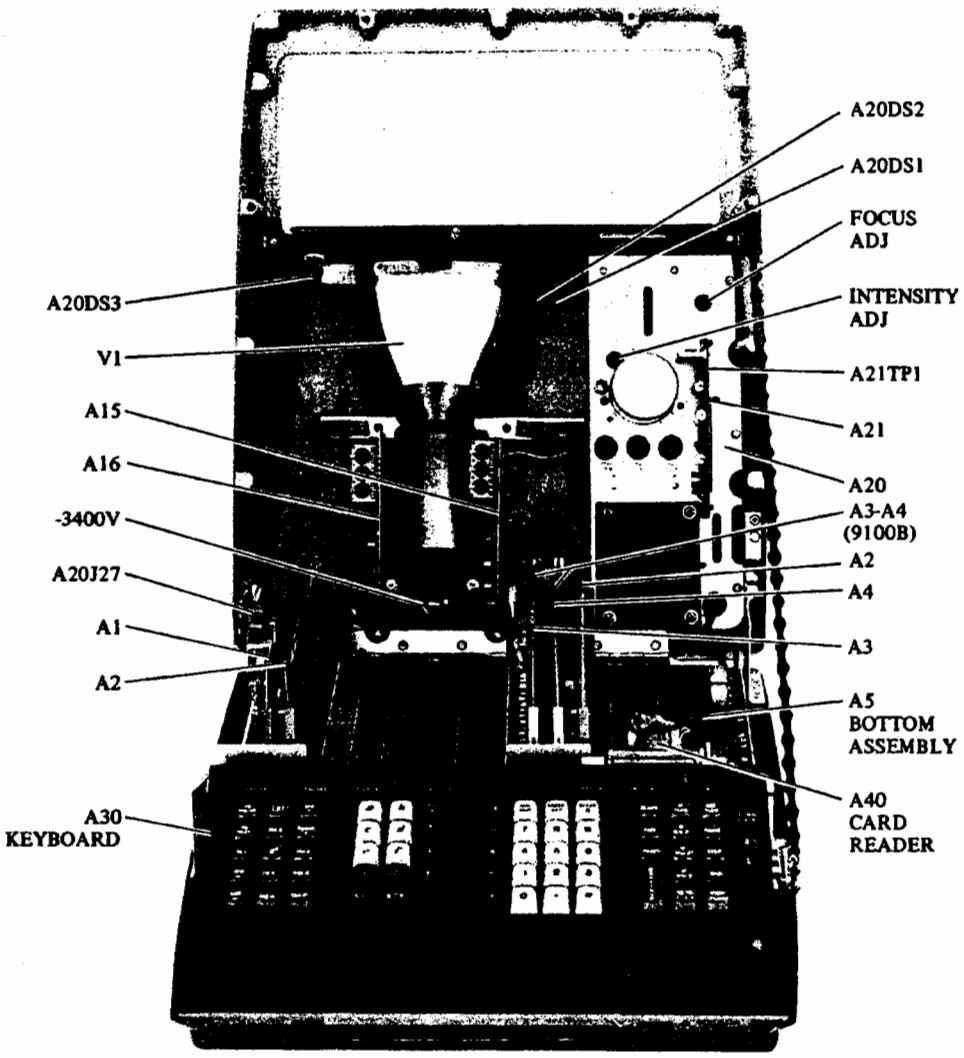

Figure 7. Assemblies of the 9100A/B

SERVICE CHAIN INSTALLATION

11. Remove the chain from the kit and install (see fig. 8). Push the support latch in and let the cover back against the chain.

> **CAUTION**
> DON'T FLIP THE TOP ALL THE WAY BACK; IT WILL GOUGE THE REAR CONNECTOR AND MAY SCRATCH THE TOP.

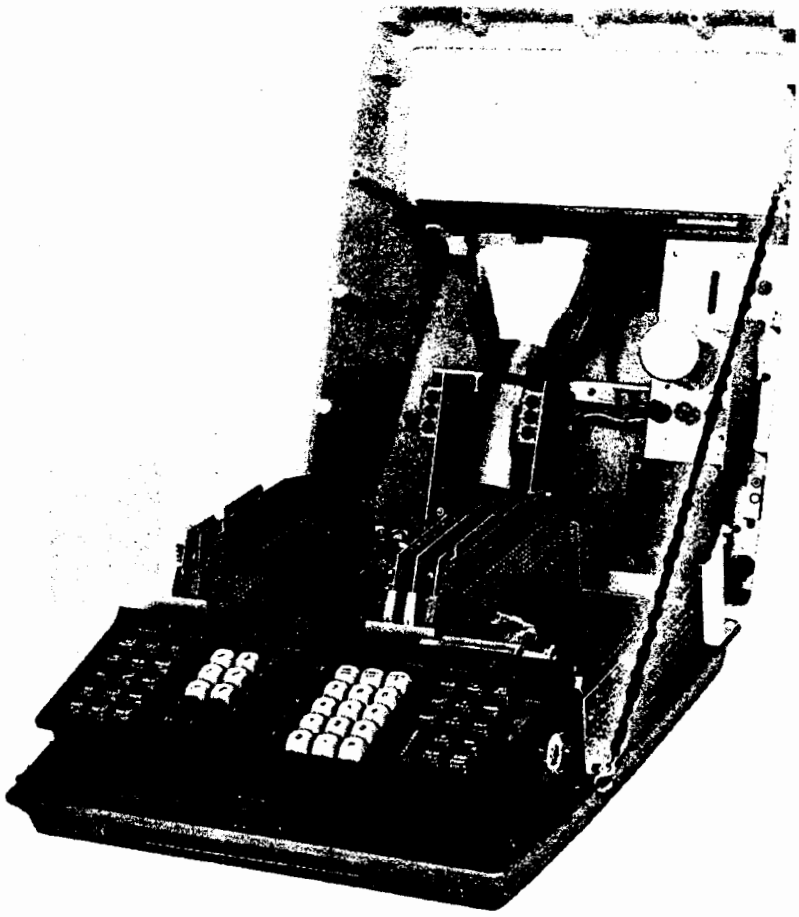

12. Remove the vertical amplifier (A16 in fig. 7), clean the connector, tighten the pin connectors and reinstall.

    Reconnect the wiring.
    White/Black ..... up
    White/Red ..... down

13. Remove the horizontal amplifier (A15 in fig. 7), clean the connector, tighten the pin connectors and reinstall.

    Reconnect the wiring.
    White/Orange ..... right
    White/Brown ..... left

14. Remove the −15V power supply (A21 in fig. 7).
15. Remove the screws (7) (B in fig. 4) holding the power supply assembly. Lift the power supply assembly and turn it on its side.

> **CAUTION**
> THE TOP OF THE CALCULATOR MUST BE SUPPORTED WHEN THE POWER SUPPLY MOUNTING SCREWS ARE LOOSENED; IF NOT, THE CALCULATOR WILL TIP BACKWARD.

16. Clean the underside of the power supply assembly. Before installation, make sure the output lead of the high voltage transformer comes straight out of the transformer. If it is left too close to the transformer, it will arc (see fig. 9).

A20A2T1 LEAD DRESSING

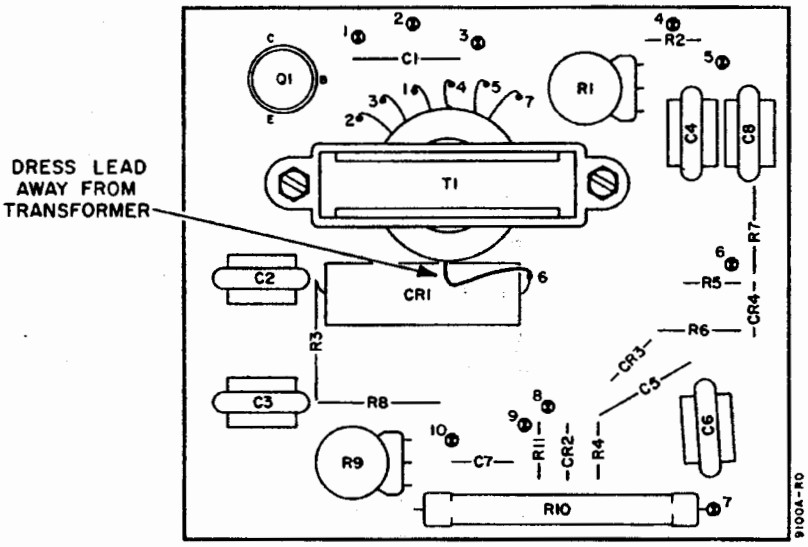

Figure 9. The A20A2 Assembly

17. Reinstall the power supply assembly.
18. Clean the contacts of the −15V power supply assembly and reinstall.
19. Tighten all screws and bolts on the calculator.
20. Pull the top of the calculator into its normally open position and remove the chain.
21. Reconnect the power cord and turn the calculator on.
22. Measure −15V +/−.5V at A21P1 (fig. 7) using -hp- 427A. Adjust A21R13 (−15 volts).
23. Measure from center pin of A21R19 (HV) to ground. Adjust A21R19 for reading of +27.4VDC +/−.3V.
24. Enter minus one in the X register and take the square root of it. The error light should light; if it does not, check the error light.

25. Enter 8's in the X, Y and Z registers.

26. Adjust the intensity and focus located on the power supply assembly (A20) for a sharp, bright display on the CRT.

> **CAUTION**
> HIGH VOLTAGE. USE INSULATED SCREWDRIVER.

27. Adjust the:

(Vertical Amplifier A16)	(Horizontal Amplifier A15)
Register Separation	Register Length
Character Height	Right E Adjust
Vertical Position	Horizontal Position

on the horizontal and vertical amplifiers for a display similar to Fig. 10.

DISPLAY TEMPLATE

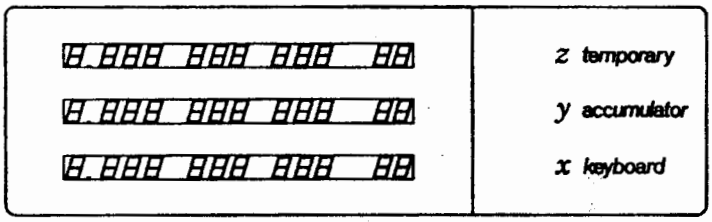

Figure 10. A Properly Adjusted CRT Display

28. Close calculator cover.

> **CAUTION**
> ALL BOARDS MUST BE INSERTED COMPLETELY INTO THEIR CONNECTORS. DAMAGE TO OTHER BOARDS COULD RESULT IF ALL BOARDS ARE NOT PROPERLY SEATED. WHEN PROPERLY SEATED, THE BOARD'S EXTRACTOR WILL BE IN AN UPRIGHT POSITION.

29. Clean the calculator case with a soft, damp cloth.

30. Clean the display bezel with a soft cloth dampened with the cleaner provided.

> **CAUTION**
> NO OTHER TOOLS OR METHODS OF CLEANING SHOULD BE ATTEMPTED AS THE DISPLAY BEZEL IS EASILY SCRATCHED.

31. Check magnetic cardreader by entering a program from a magnetic card into the calculator's memory and recording that program on another magnetic card.

NOTE
The card cannot be recorded if its corner is clipped

32. Check digit entry and arithmetic section of keyboard by pressing the keys shown:

SET:	DEGREES	FLOATING	RUN
	KEYS	DISPLAY	
	π	3.141 592 653 00	
	9, 9, $\sqrt{x}$	9,949 874 371 00	

33. Check control, storage and recall sections of keyboard by pressing keys shown:

NOTE
Calculator algorithms are performed in floating notation. Due to possible error in the twelfth place, the calculator display has a +/−1 count tolerance.

KEYS	DISPLAY
3, 5, sin x	5.735 764 363 −01
arc, sin x	3.499 999 999 01
3, 5, cos x	8.191 520 442 −01
arc, cos x	3.499 999 999 01
3, 5, tan x	7.002 075 381 −01
arc, tan x	3.499 999 999 01
5, hyper, sin x	7.420 321 057 01
arc, hyper, sin x	5.000 000 000 00
5, hyper, cos x	7.420 994 852 01
arc, hyper, cos x	5.000 000 000 00
4, hyper, tan x	9.993 292 997 −01
arc, hyper, tan x	4.000 000 000 00
3, e^x	2.008 553 692 01
5, 0, ln x	3.912 023 005 00
5, 0, log x	1.698 970 004 00

34. Check INT X, |Y|, ACC +, ACC −, RCL:

SET: FIXED POINT
SET: DECIMAL DIGITS to 3

Press CLEAR, enter 123.456 in the X register. Press the INT X key. The X register should now have 123 in it. Press the − key, the Y register now has −123 in it. Press |Y|, the display in the Y register changes to 123. Press CLEAR, π, ↑, ACC +, then ACC −, then RCL. The X and Y registers should contain zeros.

35. Check rectangular to polar to rectangular conversion:

SET: FLOATING

Enter 3 in the Y register and 4 in the X register, press TO POLAR:

3.686 989 764 01	should appear in Y
5.000 000 000 00	should appear in X

Press TO RECT:

2.999 999 999 00	should appear in Y
4.000 000 000 00	should appear in X

For 9100B go to STEP 38

36. Replace screws in the bottom of the calculator.

37. Enter and run diagnostic program.

9100B ONLY

38. Check $x \leftarrow ( )$

PRESS: π $\uparrow$ $y \rightarrow ( )$ $\frac{}{2}$ $x \leftarrow ( )$ $\frac{}{2}$

The X and Y registers should contain π.

39. Check the subroutine nesting:

A. PRESS: END, GO TO ( ) ( ), SUB RETURN, 1, 0
SWITCH: PROGRAM

The Z register should display 1.0 ---- XX

NOTE
The XX may be any number.

B. SWITCH: RUN
PRESS: GO TO ( ) ( ), SUB RETURN, –, 2, 0
SWITCH: PROGRAM

The Z register should display –2.0 ---- XX

C. SWITCH: RUN
PRESS: GO TO ( ) ( ), SUB RETURN, +, 3, 0
SWITCH: PROGRAM

The Z register should display 3.0 ---- XX

D. SWITCH: RUN
PRESS: GO TO ( ) ( ), SUB RETURN, 4, 0
SWITCH: PROGRAM

The Z register should display 4.0 ---- XX

E. SWITCH: RUN
PRESS: GO TO ( ) ( ), SUB RETURN, 5, 0
SWITCH: PROGRAM

The Z register should display 5.0 ---- XX

F. SWITCH: RUN
PRESS: SUB RETURN
SWITCH: PROGRAM

The Z register should display 4.0 ---- XX

G. SWITCH: RUN
PRESS: SUB RETURN
SWITCH: PROGRAM

The Z register should display 3.0 ---- XX

H. SWITCH: RUN
PRESS: SUB RETURN
SWITCH: PROGRAM

The Z register should display –2.0 ---- XX

I. SWITCH: RUN
PRESS: SUB RETURN
SWITCH: PROGRAM

The Z register should display 1.0 ---- XX

J. SWITCH: RUN
PRESS: SUB RETURN
SWITCH: PROGRAM

The Z register should display 0.0 ---- XX

SWITCH: RUN

40. Enter and run diagnostic program.

41. Replace screws in bottom of the calculator.

When a calculator performs an operation, the signals required for that operation flow in a loop through all the calculator's assemblies. If one assembly is defective, the loop is broken and the calculator will not work. The service kit allows substitution of assemblies into the loop until the defective assembly is replaced by a good assembly, thereby, restoring the calculator to operation.

> **NOTE**
> Prior to making a calculator service call, install your kit assemblies in a known-good calculator and check them for proper operation.

STEP 1 VERIFY THE PROBLEM

Prior to troubleshooting a calculator, ensure the calculator is defective; run the diagnostic program and, if possible, have the operator show you the trouble. This may not be necessary if the failure is catastrophic (e.g. no display) but always do this if the calculator appears to be functioning normally; the problem may be intermittent or associated with manual operation (e.g. π key sticks). Always check for a pseudo-hardware problem.

STEP 2 CHECK THE CRT

Raise the calculator cover and, while listening carefully, shake the CRT. If it rattles, elements in the CRT may be shorting and may have already destroyed the horizontal and/or vertical deflection assemblies along with the bottom assembly.

If these assemblies are replaced with kit assemblies, without the CRT being changed, the kit assemblies may also be destroyed.

This type of CRT failure is caused by a physical shock which breaks the glass electron gun support rods. If the horizontal or vertical deflection plates then touch a grounded element in the CRT, 220 volts will be routed into the bottom assembly by the horizontal or vertical deflection assembly (depending on which deflection plate was grounded); this 220 volts will do extensive bottom assembly damage.

Here are the symptoms for broken vertical deflection plate support rods:

1. A sudden downward shift in the calculator display has occurred sometime in the past. (This may have been temporarily corrected by adjusting the vertical Position Adj (A16R22)).
2. The calculator has no vertical deflection in any register.
3. The CRT rattles, particularly when the top case is raised.

Here are the symptoms for broken horizontal deflection plate support rods:

1. A sudden change in the horizontal position of the display.
2. No horizontal deflection in any register.
3. The CRT rattles.

STEP 2 CHECK THE CRT (Continued)

If one or more of the above symptoms are present, replace the CRT and the Horizontal or Vertical deflection assembly (whichever is applicable), before replacing any other calculator assembly.

This problem must not be confused with the change in display caused by changing the calculator's location; that is caused by the CRT being affected by the earth's magnetic field. In this problem, the display is usually tilted and is fixed by loosening the CRT supports and rotating the CRT until the trace sweeps horizontally across the CRT bezel. Then, perform step 27 in the Performance Assurance Procedure.

STEP 3 TROUBLESHOOTING TREE

Figure 16 is a troubleshooting tree for the 9100A/B Calculator. The tree contains troubleshooting tips which should help you identify the defective calculator assembly.

> **CAUTION**
> PRIOR TO REMOVING OR REPLACING ASSEMBLIES IN A CALCULATOR, TURN THE INSTRUMENT OFF; OTHERWISE, DAMAGE TO THE CALCULATOR MAY RESULT.

THE INTERMITTENT CALCULATOR

Intermittent calculators are difficult to fix. The best approach is to try, somehow, to convert the intermittent problem to a consistent problem and then use the service kit to identify the defective assembly.

Here are two methods which may be used in an attempt to convert an intermittent problem to a consistent problem:

1. Vary the −15V supply voltage above and below the −15V nominal setting in .5V steps, checking for correct operation after each adjustment.
2. Heat and cool the assemblies using a hair dryer and a freon spray while the calculator is operating. Have the assemblies loose in their connectors so that they can be sequentially swapped quickly after instrument failure.

> **CAUTION**
> DO NOT SUBJECT THE CALCULATOR TO TEMPERATURE EXTREMES THAT WILL CAUSE COMPONENT DAMAGE.

There is no guarantee that the first assembly that fails using this procedure is the root of the problem; however, if the calculator is very intermittent, verification should be easy.

FIELD REPAIRABLE ASSEMBLIES

Four calculator assemblies are repaired, in the field, to a component level; they are the Horizontal and Vertical Deflection Assemblies (A15 and A16) and the Power Supply Assemblies (A20 and A21). Schematics, theory of operation and waveforms for these assemblies are provided following the troubleshooting tree. The theory of operation is located on the apron of the schematic page or the facing page.

MODIFIED CALCULATORS

The 9100A/B Calculator must be modified in order to drive the large screen display. This modification entails a different A15, A16 and A21 assembly, along with an internal cable assembly. Two versions of these modified assemblies exist; a voltage source and a current source. The current source assemblies are used with the Model 9150A Display. The voltage source assemblies are used with the older Model 1300A Display. The part numbers of these assemblies are listed below:

VOLTAGE SOURCE

	Part Number
A15 Horizontal Deflection Assembly	09100-91001
A16 Vertical Deflection Assembly	09100-01002
A21 −15V Power Supply Assembly	09100-91003

CURRENT SOURCE

	Part Number
A15 Horizontal Deflection Assembly	09100-91010
A16 Vertical Deflection Assembly	09100-91011
A21 −15V Power Supply Assembly	09100-91003

Troubleshoot a modified calculator as though it were unmodified. If necessary, unmodified assemblies may be freely interchanged with modified assemblies; however, the ability to drive the large display, of course, is lost. When replacing the modified A21 assembly, DO NOT connect the internal cable assembly wiring to the −15V test point.

INTERCHANGEABLE ASSEMBLIES

Certain calculator assemblies are interchangeable between the 9100A and the 9100B. The following information may make servicing the 9100A/B somewhat easier if the appropriate kit is not available.

The flip-flop assemblies (09100-69502) and the entire top case (power supply, CRT, etc.) are common to both calculators.

The keyboard assembly is essentially interchangeable, with obvious limitations. A 9100B keyboard (09100-69921) will not give a 9100A "subroutine" or "x ← ( )" capability. Likewise, a 9100A keyboard (09100-69508) will make the "subroutine" or "x ← ( )" keys inaccesible when installed in a 9100B. However, the opposite keyboard can be used to determine, with 95% confidence, whether a calculator failure is due to the keyboard.

INTERCHANGEABLE ASSEMBLIES (Continued)

The control logic (A1) assembly has very limited interchangeability. A 9100B Calculator with a 9100A control logic assembly (09100-69501) can perform a "CLEAR", enter π, do all digit entry (except "CHG SIGN"), "GO TO", and do the program mode display. No other keys are operable. A 9100A with a 9100B control logic assembly (09100-69551) has exactly the same limitations except that it will perform "CHG SIGN". All that can be said here is that if a calculator (A or B) has no display, and the opposite control logic assembly results in a display when installed, the original control logic assembly is defective.

CAUTION

NO OTHER ASSEMBLIES ARE INTERCHANGEABLE, AND SHOULD NEVER BE INSTALLED IN THE OPPOSITE CALCULATOR. THE A3 AND A4 ASSEMBLIES, FOR INSTANCE, WILL BE DESTROYED IF INSTALLED IN THE OPPOSITE CALCULATOR.

A20 POWER SUPPLY REPLACEMENT

The 9100A/B power supply assembly, -hp- Part Number 09100-69509, is shipped from the factory with the power supply cable unterminated. When replacing the power supply, the power cable must be soldered into the termination bracket in the bottom case of the calculator. Leaving the power cable unterminated makes the power supply assembly compatible with all calculator bottom cases.

The power supply assembly should be repaired in the field whenever possible, rather than replaced; however, if it becomes necessary to replace the power supply, follow the replacement procedure given below.

Replacement Procedure

1. Remove ac power cord from instrument.
2. Disconnect all peripherals from the back of the calculator.
3. Loosen the calculator top case and tilt up until it locks into place.
4. Remove the keyboard and bottom assembly from instrument.
5. Remove the two cable clamps which secure the power supply cable to the top case.
6. Remove the top case by removing the six screws which secure the hinge to the bottom case.
7. Remove the power receptacle bracket (applies only to Figure 11) or the rear bezel (applies to Figures 12, 13, and 14).
8. Unsolder the six wires of the power supply cable from their termination in the bottom case. The diagrams below show the power receptacle, switch, and filters with the power supply cable removed.
9. Remove the power supply from the instrument.

10. Install the new power supply. Refer to the wiring diagrams below for the power supply cable connections (6 wires) in the bottom case. Notice that there are three possible configurations for the power cable termination in the new bottom case (includes 115/230V outlet).

11. Reinstall the power receptacle bracket (Figure 11) or the rear bezel (Figures 12, 13, and 14).

12. Remount the top case assembly on the bottom case and reinstall the two clamps which hold the power supply cable.

13. Install the bottom assembly and keyboard and replace the power cord. Verify calculator operation by executing the diagnostic program (9100A or 9100B). Close the top case.

WIRING DIAGRAMS

Solder the six wires of the power supply cable to the points indicated.

NOTE

(924) Denotes wire color: Color code same as resistor color code. First number identifies base color, second number identifies wider strip, third number identifies narrower strip. (e.g. (924) = white, red, yellow).

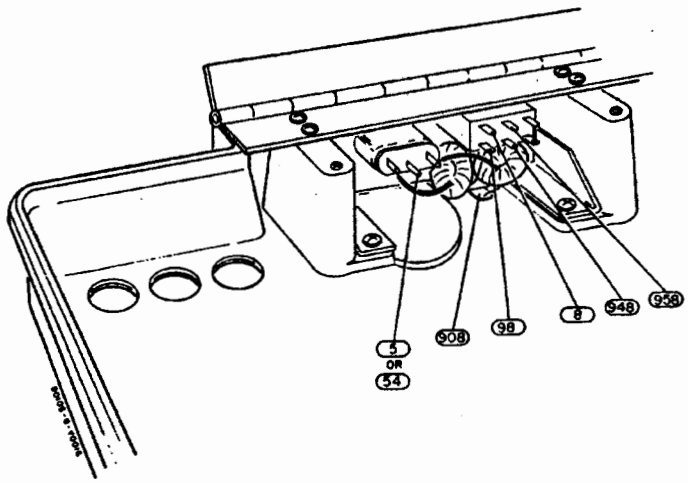

Figure 11. Original Bottom Case Configuration

A20 POWER SUPPLY REPLACEMENT (Continued)

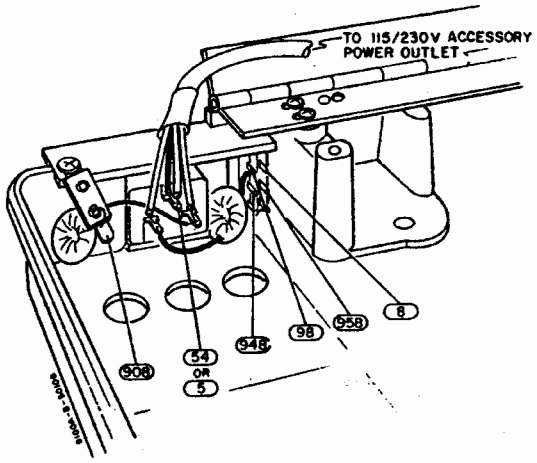

Figure 12. First Configuration for Bottom Case With 115/230V Power Outlet

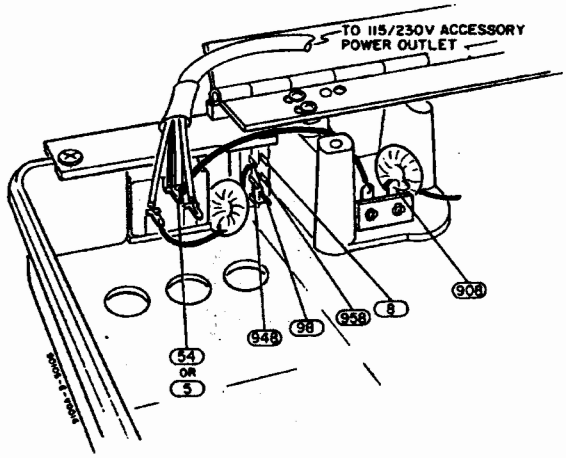

Figure 13. Second Configuration for Bottom Case With 115/230V Power Outlet

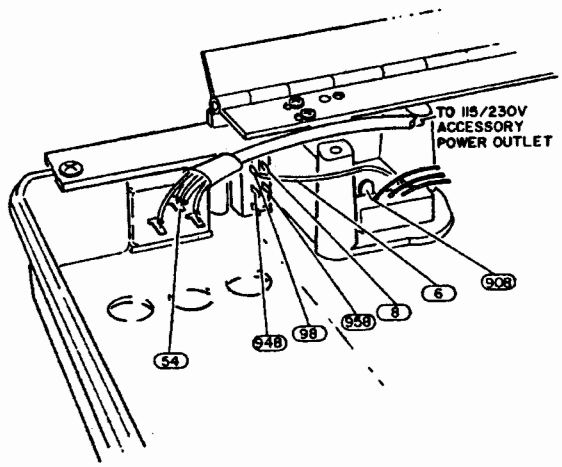

Figure 14. Third Configuration for Bottom Case With 115/230V Power Outlet

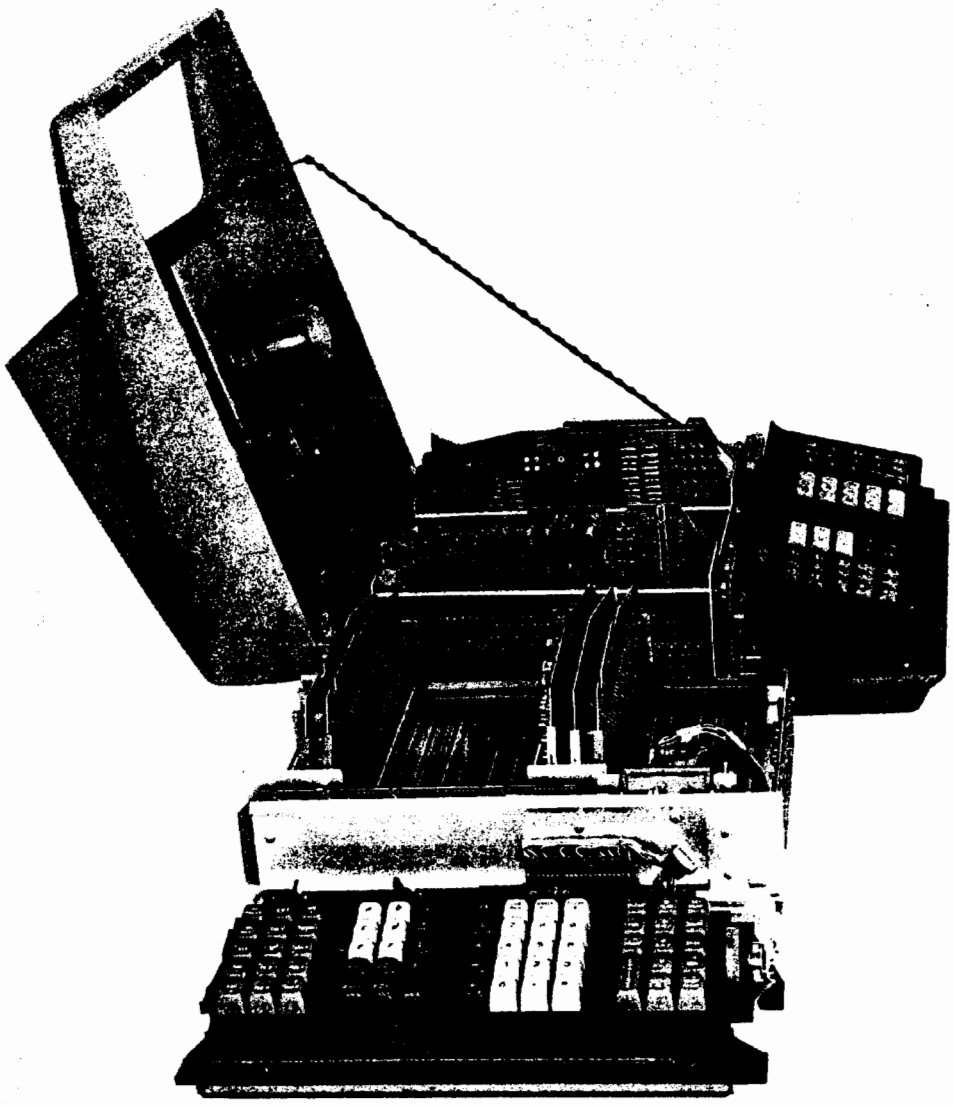

Figure 15. Checking the Bottom Assembly

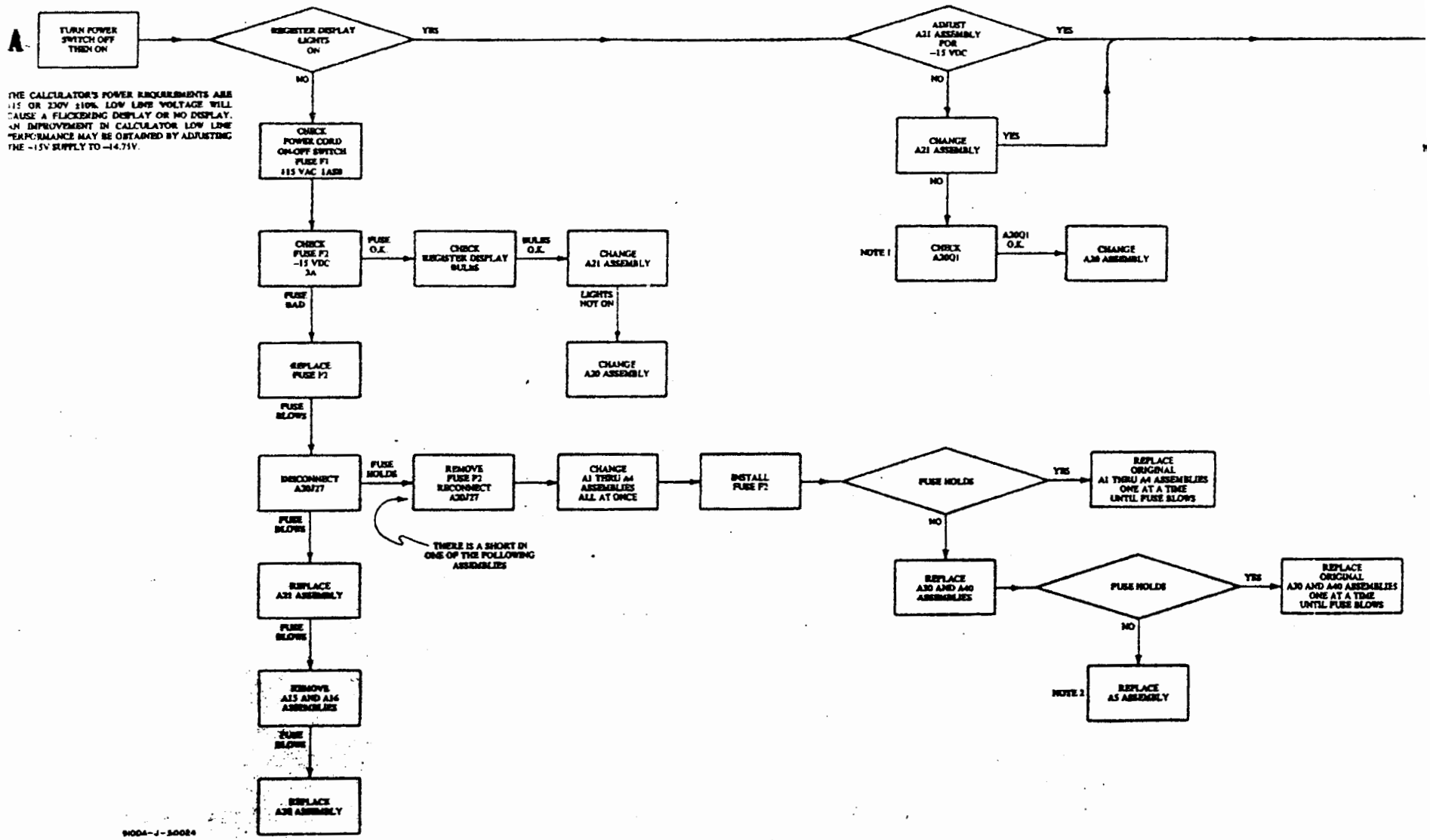
A
TURN POWER SWITCH OFF THEN ON
REGISTER DISPLAY LIGHTS ON
YES
NO
ADJUST A21 ASSEMBLY FOR −15 VDC
YES
NO
CHANGE A21 ASSEMBLY
YES
NO
THE CALCULATOR'S POWER REQUIREMENTS ARE 115 OR 230V ±10%. LOW LINE VOLTAGE WILL CAUSE A FLICKERING DISPLAY OR NO DISPLAY. AN IMPROVEMENT IN CALCULATOR LOW LINE PERFORMANCE MAY BE OBTAINED BY ADJUSTING THE −15V SUPPLY TO −14.75V.
CHECK POWER CORD ON-OFF SWITCH FUSE F1 115 VAC 1A SB
CHECK FUSE F2 −15 VDC 3A
FUSE O.K.
CHECK REGISTER DISPLAY BULBS
BULBS O.K.
CHANGE A21 ASSEMBLY
FUSE BAD
LIGHTS NOT ON
CHANGE A20 ASSEMBLY
REPLACE FUSE F2
FUSE BLOWS
NOTE 1
CHECK A30Q1
A30Q1 O.K.
CHANGE A30 ASSEMBLY
DISCONNECT A30J27
FUSE HOLDS
REMOVE FUSE F2 RECONNECT A30J27
CHANGE A1 THRU A4 ASSEMBLIES ALL AT ONCE
INSTALL FUSE F2
FUSE HOLDS
YES
REPLACE ORIGINAL A1 THRU A4 ASSEMBLIES ONE AT A TIME UNTIL FUSE BLOWS
FUSE BLOWS
THERE IS A SHORT IN ONE OF THE FOLLOWING ASSEMBLIES
NO
REPLACE A30 AND A40 ASSEMBLIES
FUSE HOLDS
YES
REPLACE ORIGINAL A30 AND A40 ASSEMBLIES ONE AT A TIME UNTIL FUSE BLOWS
NO
NOTE 2
REPLACE A5 ASSEMBLY
REPLACE A21 ASSEMBLY
FUSE BLOWS
REMOVE A15 AND A16 ASSEMBLIES
FUSE BLOWS
REPLACE A20 ASSEMBLY
9100A-J-50024

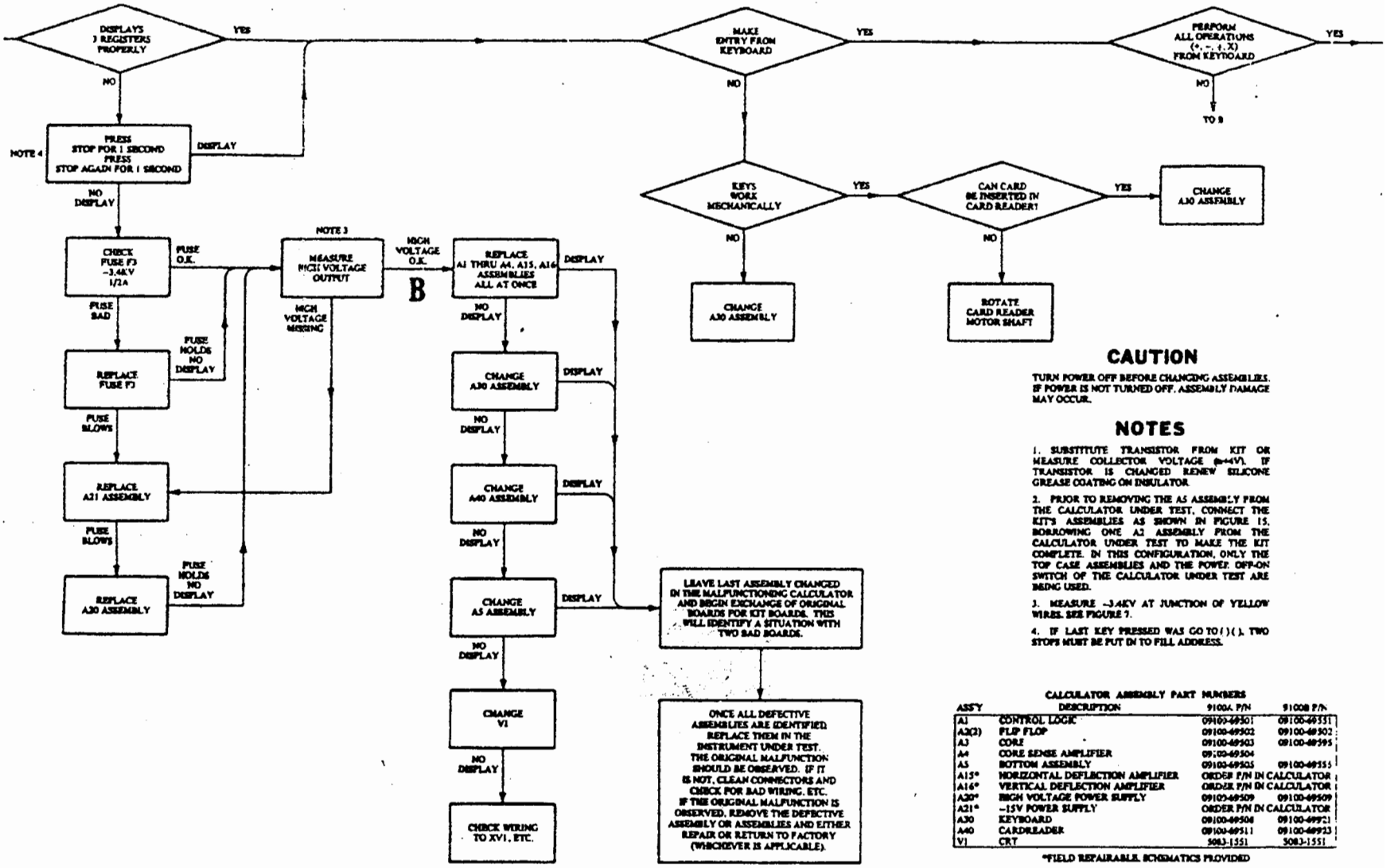

CAUTION

TURN POWER OFF BEFORE CHANGING ASSEMBLIES. IF POWER IS NOT TURNED OFF, ASSEMBLY DAMAGE MAY OCCUR.

NOTES

1. SUBSTITUTE TRANSISTOR FROM KIT OR MEASURE COLLECTOR VOLTAGE (≈+4V). IF TRANSISTOR IS CHANGED RENEW SILICONE GREASE COATING ON INSULATOR.

2. PRIOR TO REMOVING THE A5 ASSEMBLY FROM THE CALCULATOR UNDER TEST, CONNECT THE KIT'S ASSEMBLIES AS SHOWN IN FIGURE 15, BORROWING ONE A2 ASSEMBLY FROM THE CALCULATOR UNDER TEST TO MAKE THE KIT COMPLETE. IN THIS CONFIGURATION, ONLY THE TOP CASE ASSEMBLIES AND THE POWER OFF-ON SWITCH OF THE CALCULATOR UNDER TEST ARE BEING USED.

3. MEASURE −3.4KV AT JUNCTION OF YELLOW WIRES. SEE FIGURE 7.

4. IF LAST KEY PRESSED WAS GO TO ( ) ( ), TWO STOPS MUST BE PUT IN TO FILL ADDRESS.

CALCULATOR ASSEMBLY PART NUMBERS

ASS'Y	DESCRIPTION	9100A P/N	9100B P/N
A1	CONTROL LOGIC	09100-69501	09100-69551
A2(2)	FLIP FLOP	09100-69502	09100-69502
A3	CORE	09100-69503	09100-69595
A4	CORE SENSE AMPLIFIER	09100-69504	
A5	BOTTOM ASSEMBLY	09100-69505	09100-69555
A15*	HORIZONTAL DEFLECTION AMPLIFIER	ORDER P/N IN CALCULATOR	
A16*	VERTICAL DEFLECTION AMPLIFIER	ORDER P/N IN CALCULATOR	
A20*	HIGH VOLTAGE POWER SUPPLY	09100-69509	09100-69509
A21*	−15V POWER SUPPLY	ORDER P/N IN CALCULATOR	
A30	KEYBOARD	09100-69508	09100-69921
A40	CARDREADER	09100-69511	09100-69923
V1	CRT	5083-1551	5083-1551

*FIELD REPAIRABLE. SCHEMATICS PROVIDED

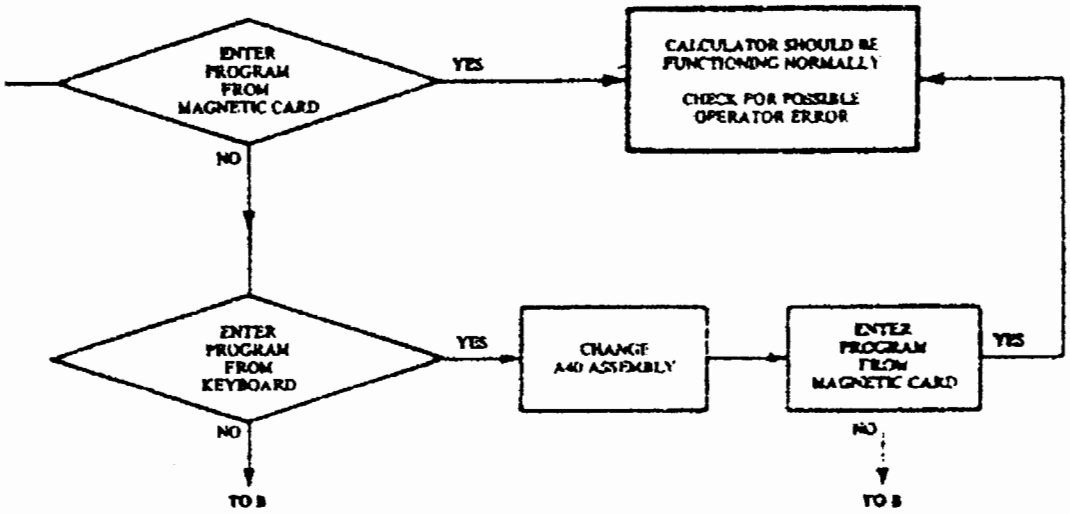

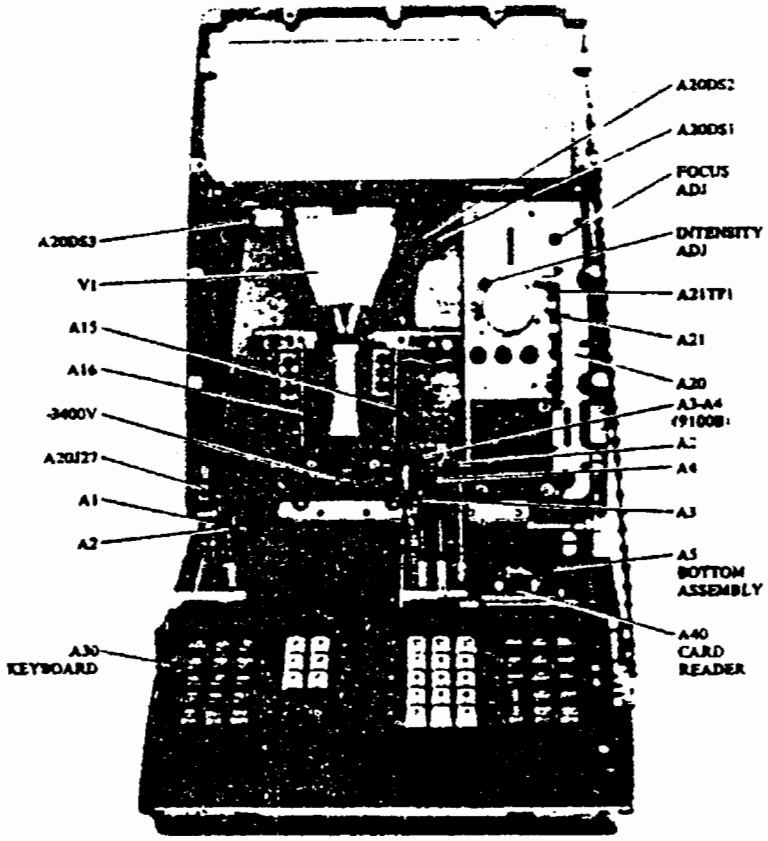

Figure 16. Troubleshooting Tree

STANDARD VERTICAL DEFLECTION AMPLIFIER THEORY OF OPERATION

Basically, the vertical deflection amplifier is a logic to analog converter; it converts the four logic signal inputs (ZDMV, ZDRV, ZDHD, ZDRD) to analog voltages, which are used to drive the vertical deflection plates of the CRT. The vertical deflection amplifier may be divided into three parts: the character generator, register generator and summing amplifier. The following theory of operation is referenced to Figure 18 and Figure 17, the schematic and waveforms of the vertical deflection amplifier.

REGISTER GENERATOR

The register generator generates the waveform ⑨ , shown to the right in Figure 17. A register (X, Y, or Z) is displayed during the time of each waveform plateau. The cycle starts with ZDRV pulsing negative momentarily; this will saturate A16Q3 and discharge A16C2. When the X register has displayed, ZDMV will pulse negative momentarily. This will turn A16Q1 on, which will turn A16Q2 on, resulting in A16C2 charging to a new voltage level (dependent on the pulse width of ZDMV and the setting of A16R21). When the Y register has been displayed, ZDMV will again pulse negative, resulting in a new charge on A16C2. When the Z register has been displayed ZDRV will discharge A16C2 and the cycle is ready to start again.

CHARACTER GENERATOR

The character generator operates in much the same way as the register generator, except that it operates in a much faster time reference. It generates the signal ③ shown in Figure 17. Notice that the wave form is cyclic in paired sets; the exception being the decimal point which contains only one of the set. A pair is required to display an alphameric.

The cycle starts with ZDMD positive (A16Q9 cut off) and ZDRD negative (A16Q8 saturated; A16C4 discharged). Next, ZDRD goes positive (the short in parallel with A16C4 is removed) and A16C4 begins to charge. A16C4 will continue to charge until ZDHD goes negative; at that time, A16Q9 will saturate stopping the charge of A16C4. When ZDHD goes positive again, A16C4 will resume charging. When the half cycle is complete, ZDRD will go negative (discharging A16C4) and the second half of the cycle is ready to begin.

> **NOTE**
>
> To understand how these waveforms are used in the generation of the CRT display, see the composite horizontal and vertical deflection theory of operation and waveforms on Page 39.

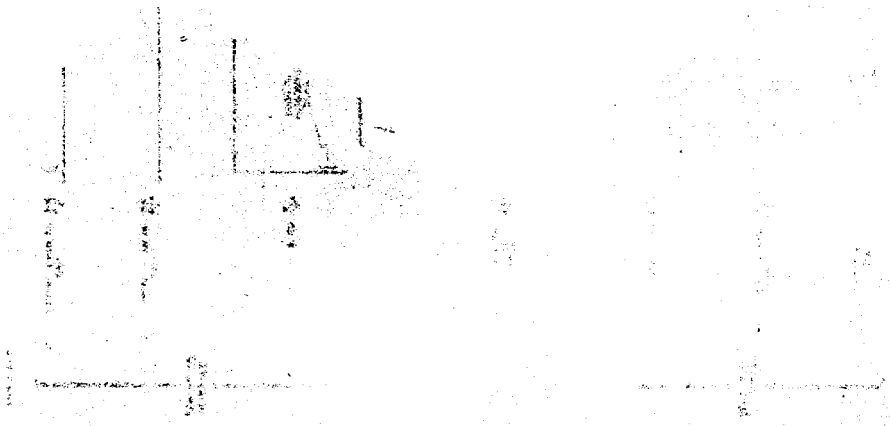

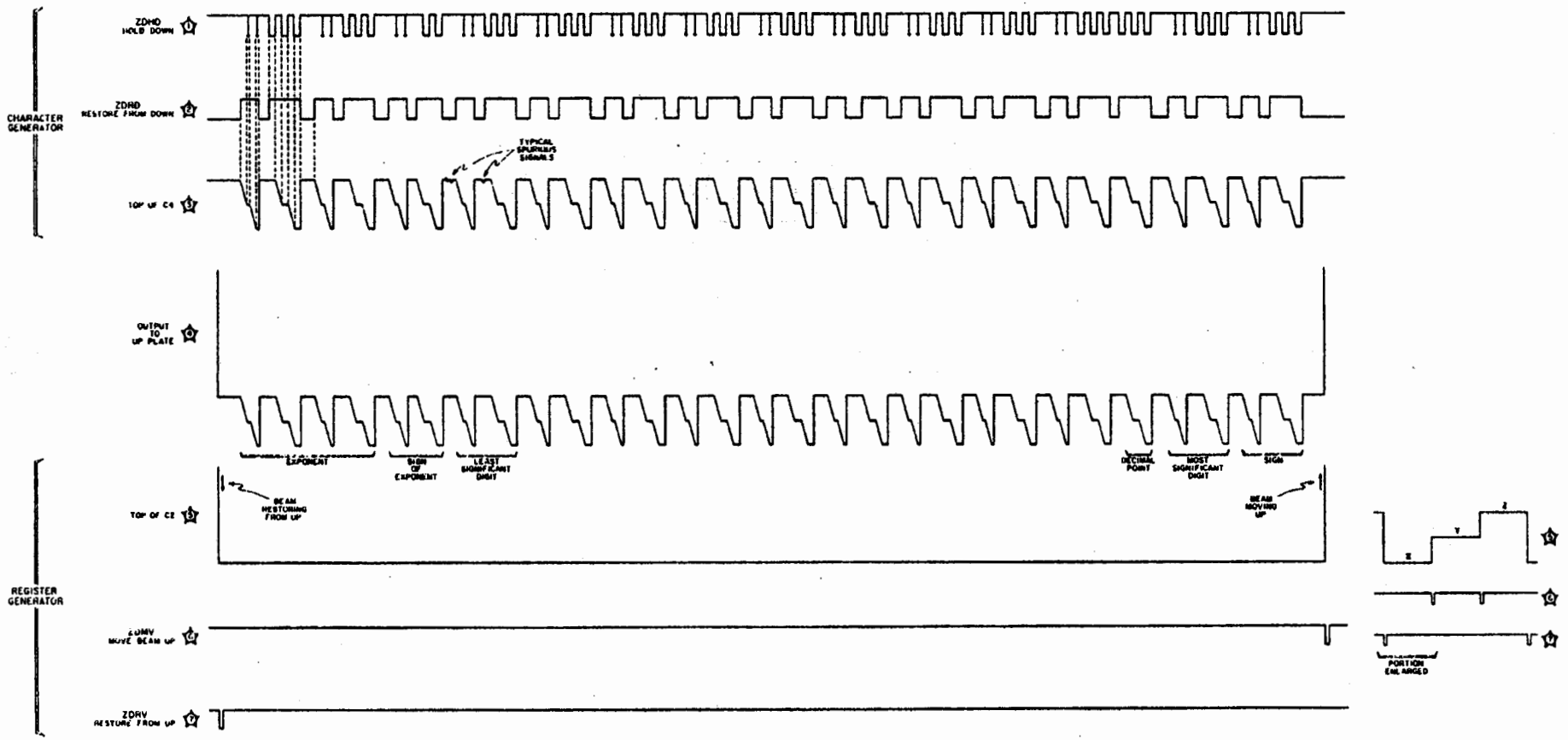

A16 Theory of Operation

Figure 17. Standard Vertical Deflection Amplifier Waveforms

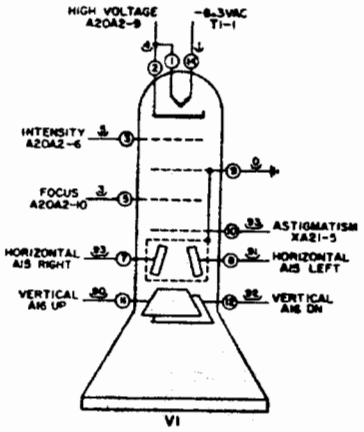

NOTES

1. PARTIAL REFERENCE DESIGNATIONS ARE SHOWN. PREFIX WITH ASSEMBLY OR SUBASSEMBLY DESIGNATION(S) OR BOTH FOR COMPLETE DESIGNATION.
2. COMPONENT VALUES ARE SHOWN AS FOLLOWS UNLESS OTHERWISE NOTED.

   RESISTANCE IN OHMS
   CAPACITANCE IN MICROFARADS

3. ↓ DENOTES POWER LINE GROUND; 1008A CHASSIS.
   ▽ DENOTES GROUND ON PRINTED CIRCUIT ASSEMBLY.
4. ——— – – ——— DENOTES ASSEMBLY.

   — — — — — — — DENOTES SUBASSEMBLY.
5. ⊘ DENOTES SCREWDRIVER ADJUST.
6. 924 DENOTES WIRE COLOR; COLOR CODE SAME AS RESISTOR COLOR CODE. FIRST NUMBER IDENTIFIES BASE COLOR, SECOND NUMBER IDENTIFIES WIDER STRIP, THIRD NUMBER IDENTIFIES NARROWER STRIP.
   (e.g. 924 = WHITE, RED, YELLOW.)
7. DC VOLTAGES WERE MEASURED WITH A HP X, Y, & Z,IN FLOATING NOTATION.

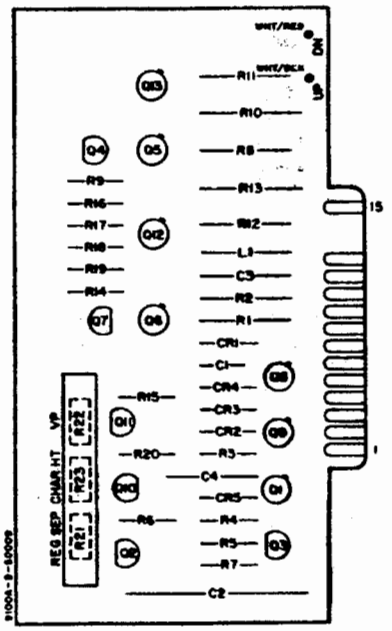

A16
hp Part No. 09100-66516
REV A

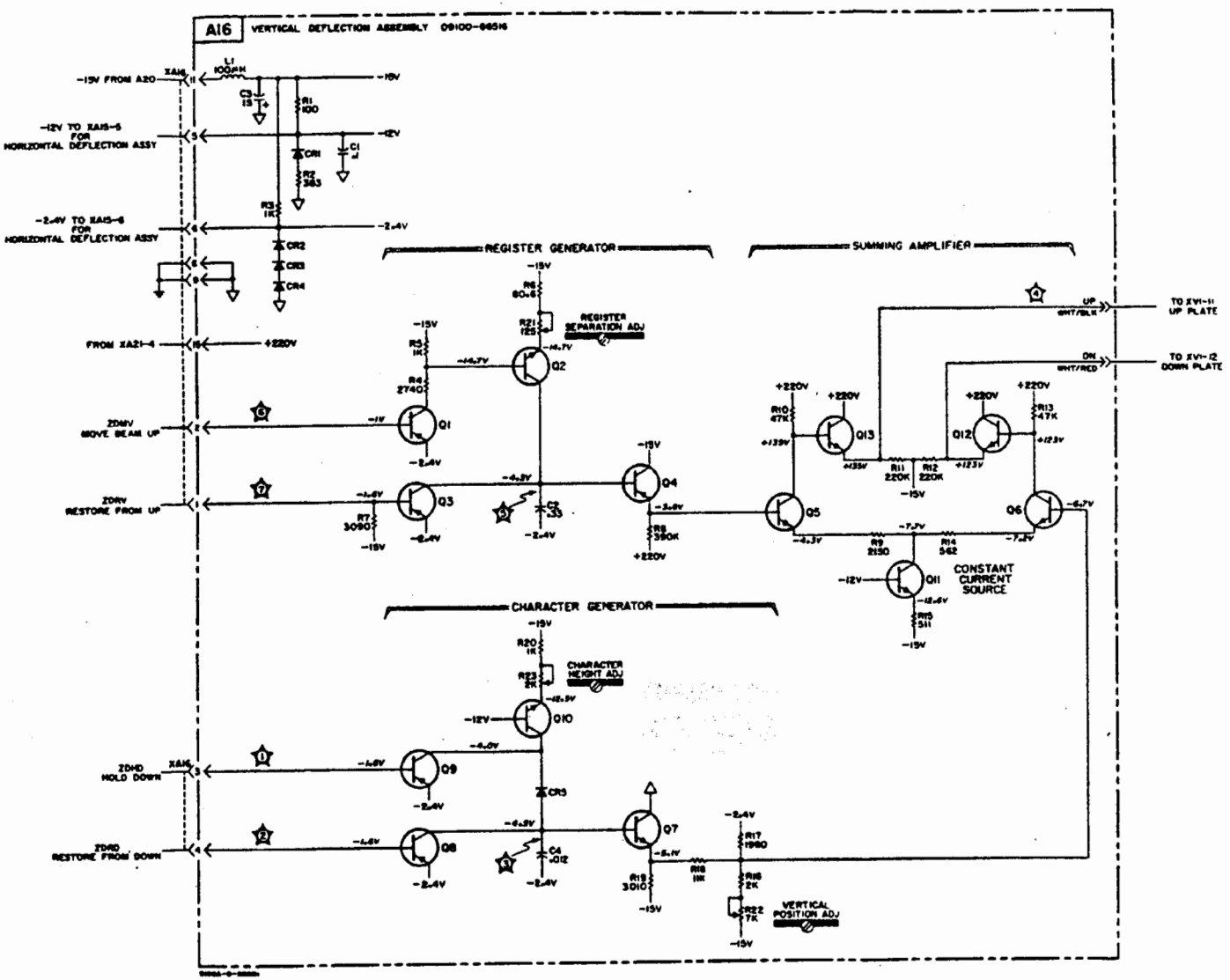

Figure 18. Standard Vertical Deflection Amplifier Sche

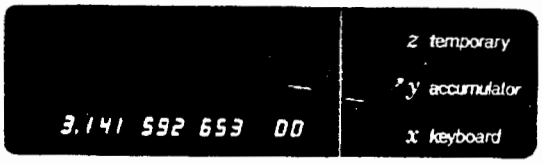

Emitter-Collector Shorted Q2; Q3
Emitter-Collector Open Q1; Q2
Emitter-Base Shorted Q2

Emitter-Collector Shorted Q1
Emitter-Collector Open
Emitter-Base Shorted

NO DISPLAY

Emitter-Collector Shorted Q4; Q5; Q6
Emitter-Collector Open Q3; Q4; Q5; Q6
Emitter-Base Shorted Q3, Q5

Emitter-Collector Shorted
Emitter-Collector Open Q13
Emitter-Base Shorted

Emitter-Collector Shorted Q13
Emitter-Collector Open
Emitter-Base Shorted

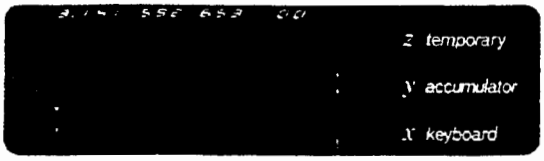

Emitter-Collector Shorted
Emitter-Collector Open Q12
Emitter-Base Shorted

Emitter-Collector Shorted Q12
Emitter-Collector Open
Emitter-Base Shorted Q6

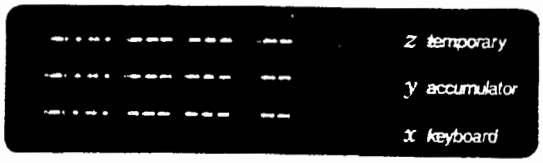

Emitter-Collector Shorted Q7; Q8; Q9
Emitter-Collector Open Q7; Q10
Emitter-Base Shorted Q10

Emitter-Collector Shorted Q10
Emitter-Collector Open
Emitter-Base Shorted

Emitter-Collector Shorted
Emitter-Collector Open Q9
Emitter-Base Shorted

Emitter-Collector Shorted
Emitter-Collector Open Q8
Emitter-Base Shorted

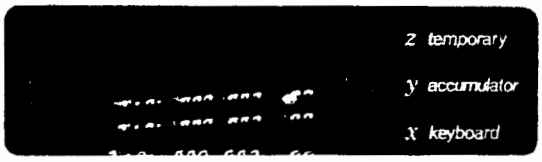

Emitter-Collector Shorted
Emitter-Collector Open
Emitter-Base Shorted Q8

NOTE

To use the incorrect display charts:
Enter π in the X, Y and Z registers in floating notation. Match the calculator's display to an example in the charts. Check the transistors listed under the example. Faults listed under the example displays with no component indicated are provided for write-in observations.

The charts do not list multiple component failures. Reference designators separated by a semicolon indicate that failure of one of the transistors will cause the example display.

Emitter-Collector Shorted
Emitter-Collector Open
Emitter-Base Shorted Q9

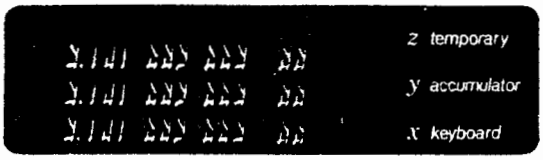

Emitter-Collector Shorted
Emitter-Collector Open
Emitter-Base Shorted Q7

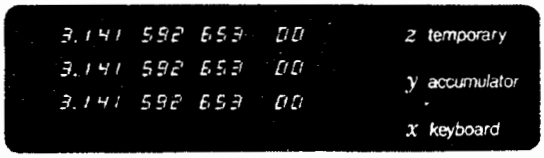

Emitter-Collector Shorted
Emitter-Collector Open
Emitter-Base Shorted Q12

Emitter-Collector Shorted
Emitter-Collector Open
Emitter-Base Shorted Q13

Emitter-Collector Shorted
Emitter-Collector Open
Emitter-Base Shorted Q4

Emitter-Collector Shorted
Emitter-Collector Open
Emitter-Base Shorted Q1

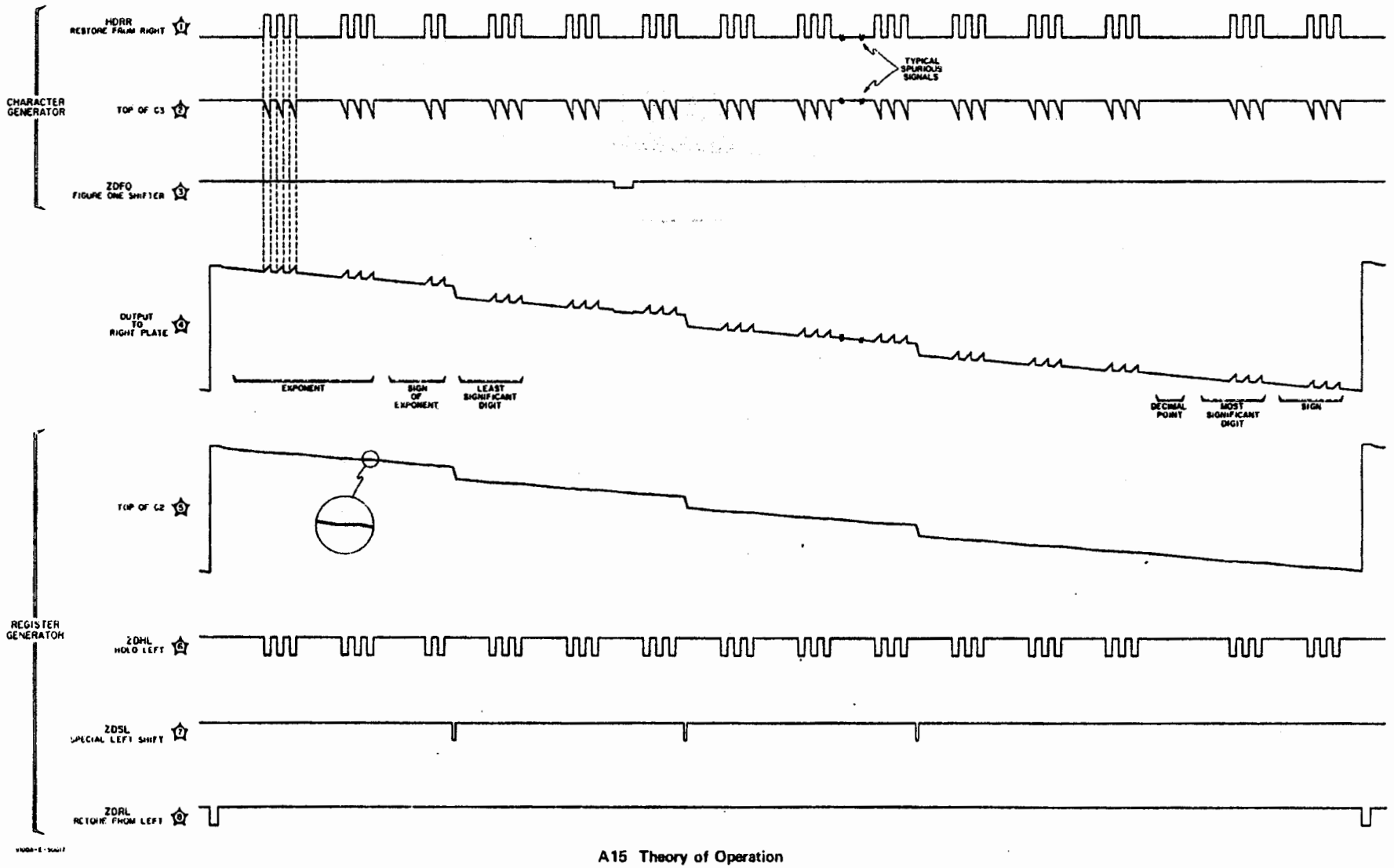

A15 Theory of Operation

Figure 19. Standard Horizontal Deflection Amplifier Waveforms

STANDARD HORIZONTAL DEFLECTION AMPLIFIER THEORY OF OPERATION

Basically, the horizontal deflection amplifier is a logic to analog converter; it converts the five logic signal inputs (ZDHL, ZDRL, ZDSL, HDRR, ZDFO) to analog voltages, which are used to drive the horizontal deflection plates of the CRT. The horizontal deflection amplifier may be divided into three parts: the character generator, register generator and summing amplifier. The following theory of operation is referenced to Figure 20 and Figure 19 the schematic and waveforms of the horizontal deflection amplifier.

REGISTER GENERATOR

The register generator generates the waveform ⑤. A register (X, Y or Z) is displayed during the time of each waveform. The cycle starts with ZDRL pulsing negative momentarily; this will saturate A15Q5 and discharge A15C2. When ZDRL goes positive, ZDHL and ZDSL will also be positive and A15C2 will begin to charge. At times during the charging of A15C2, ZDHL will pulse negative; this will saturate A15Q2; which will, in turn, stop A15C2's charging. Also, at times during A15C2's charging, (assuming a floating display presentation) ZDSL will pulse negative. When it does, both A15Q4 and Q3 will saturate, charging A15C2 rapidly. This creates a spacing of the alphamerics seen on the CRT when FLOATING is selected. When the register has been displayed, ZDRL will discharge A15C2 and the cycle starts again.

CHARACTER GENERATOR

The character generator generates a composit waveform composed of ② and ③. When HDRR is negative, A15Q13 is saturated and A15C3 is not charging; conversly, when HDRR is positive, A15Q13 is cut off and A15C3 is charging. This creates the triggers shown in waveform ②.

If the calculator is displaying the digit "1", ZDFO will go negative. This will result in the small depression shown in ④. On the CRT, the small depression will cause the digit "1" to be shifted slightly left so that it appears centered between adjacent digits.

> **NOTE**
>
> To understand how these waveforms are used in the generation of the CRT display, see the composite horizontal and vertical deflection theory of operation and waveforms on Page 39.

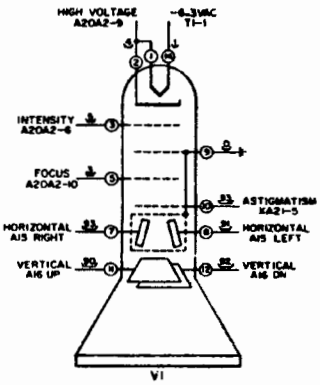

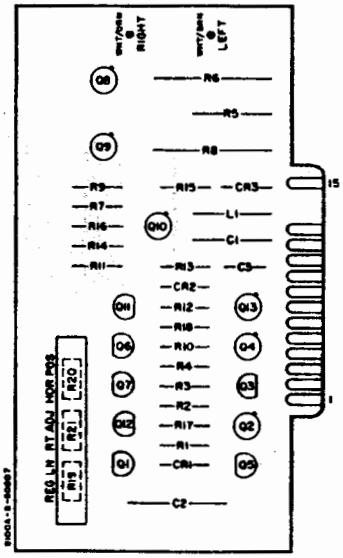

A15
hp Part No. 09100-66515
REV A

NOTES

1. PARTIAL REFERENCE DESIGNATIONS ARE SHOWN. PREFIX WITH ASSEMBLY OR SUBASSEMBLY DESIGNATION(S) OR BOTH FOR COMPLETE DESIGNATION.

2. COMPONENT VALUES ARE SHOWN AS FOLLOWS UNLESS OTHERWISE NOTED.

   RESISTANCE IN OHMS
   CAPACITANCE IN MICROFARADS

3. ⏚ DENOTES POWER LINE GROUND; 9100A CHASSIS.
   ▽ DENOTES GROUND ON PRINTED CIRCUIT ASSEMBLY.

4. ——— – – ——— DENOTES ASSEMBLY.

   – — – — – — – DENOTES SUBASSEMBLY.

5. ⊖ DENOTES SCREWDRIVER ADJUST.

6. 926 DENOTES WIRE COLOR: COLOR CODE SAME AS RESISTOR COLOR CODE. FIRST NUMBER IDENTIFIES BASE COLOR, SECOND NUMBER IDENTIFIES WIDER STRIP, THIRD NUMBER IDENTIFIES NARROWER STRIP. (e.g. 926 = WHITE, RED, YELLOW.)

7. DC VOLTAGES WERE MEASURED WITH W IN X, Y, & Z, IN FLOATING NOTATION.

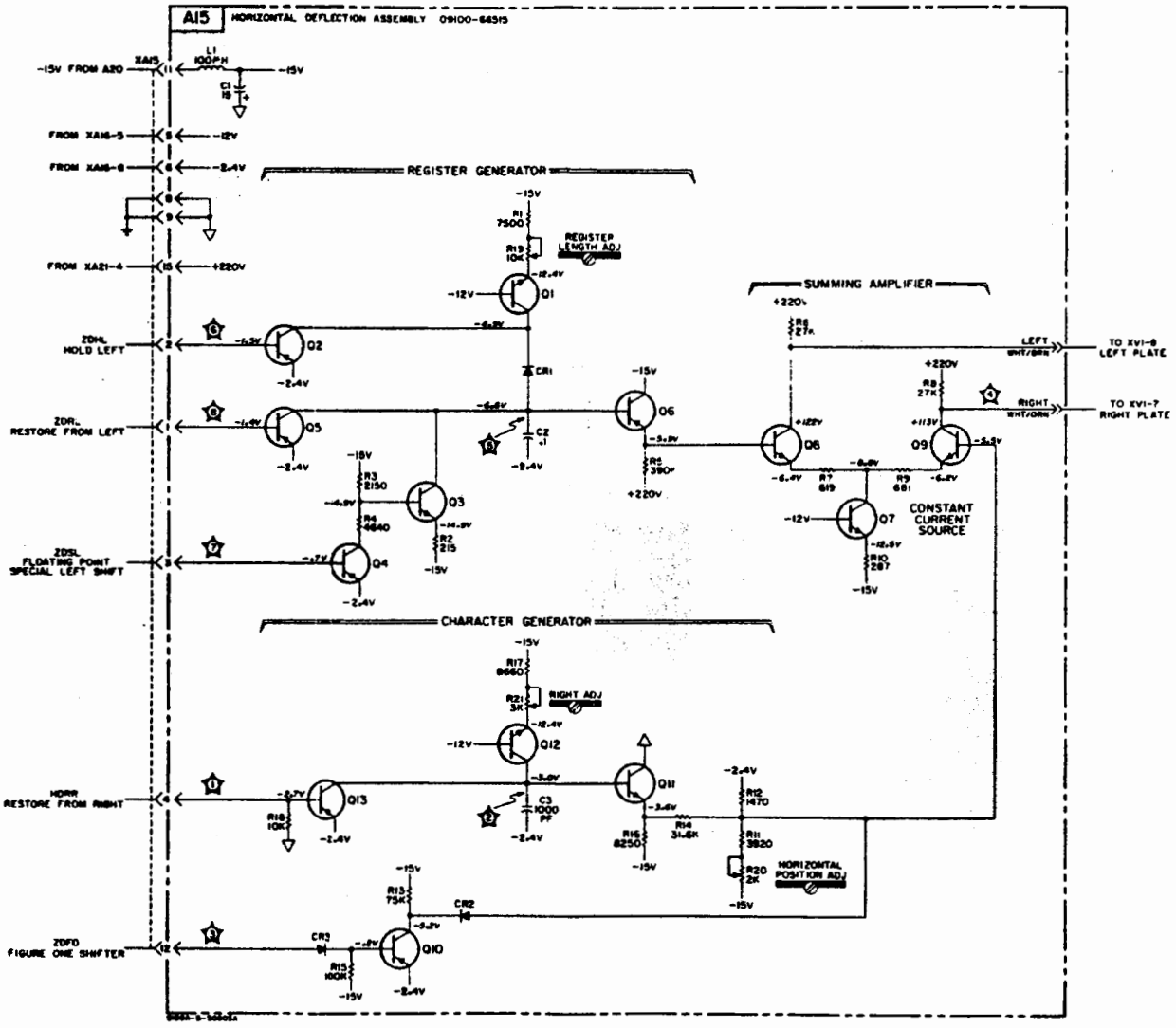

Figure 20. Standard Horizontal Deflection Amplifier Schematic

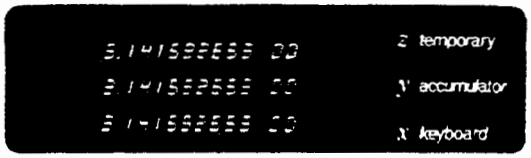

Emitter-Collector Shorted
Emitter-Collector Open Q3; Q4
Emitter-Base Shorted Q3

Emitter-Collector Shorted
Emitter-Collector Open
Emitter-Base Shorted Q2

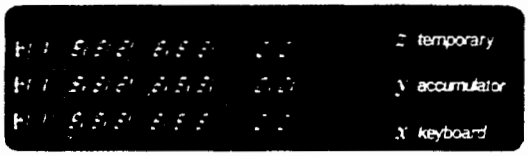

Emitter-Collector Shorted
Emitter-Collector Open Q2
Emitter-Base Shorted

Emitter-Collector Shorted
Emitter-Collector Open
Emitter-Base Shorted Q6

NO DISPLAY

Emitter-Collector Shorted Q6; Q8; Q9
Emitter-Collector Open Q5; Q8
Emitter-Base Shorted Q5

Emitter-Collector Shorted
Emitter-Collector Open
Emitter-Base Shorted Q8

Emitter-Collector Shorted Q5
Emitter-Collector Open
Emitter-Base Shorted

Emitter-Collector Shorted
Emitter-Collector Open
Emitter-Base Shorted Q9

Emitter-Collector Shorted Q4
Emitter-Collector Open
Emitter-Base Shorted

Emitter-Collector Shorted Q3
Emitter-Collector Open
Emitter-Base Shorted

Emitter-Collector Shorted
Emitter-Collector Open
Emitter-Base Shorted Q4

Emitter-Collector Shorted Q2
Emitter-Collector Open Q1
Emitter-Base Shorted Q1

INCORRECT DISPLAY

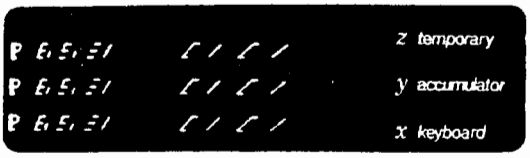

Emitter-Collector Shorted Q1
Emitter-Collector Open
Emitter-Base Shorted

Emitter-Collector Shorted
Emitter-Collector Open Q6
Emitter-Base Shorted

Emitter-Collector Shorted
Emitter-Collector Open Q9
Emitter-Base Shorted

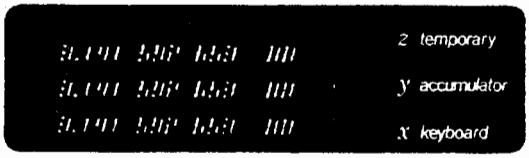

Emitter-Collector Shorted Q11; Q13
Emitter-Collector Open Q11; Q12; Q13
Emitter-Base Shorted Q12; Q13

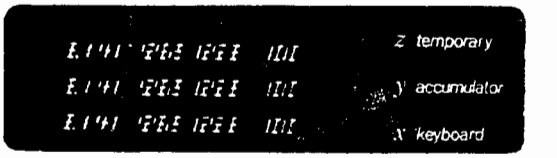

Emitter-Collector Shorted Q12
Emitter-Collector Open
Emitter-Base Shorted Q11

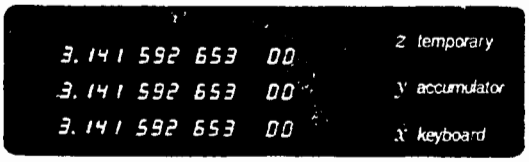

Emitter-Collector Shorted Q10
Emitter-Collector Open Q10
Emitter-Base Shorted

Emitter-Collector Shorted
Emitter-Collector Open
Emitter-Base Shorted Q10

NOTE

To use the incorrect display charts: Enter π in the X, Y and Z registers in floating notation. Match the calculator's display to an example in the charts. Check the transistors listed under the example. Faults listed under the example displays with no component indicated are provided for write-in observations.

The charts do not list multiple component failures. Reference designators separated by a semicolon indicate that failure of one of the transistors will cause the example display.

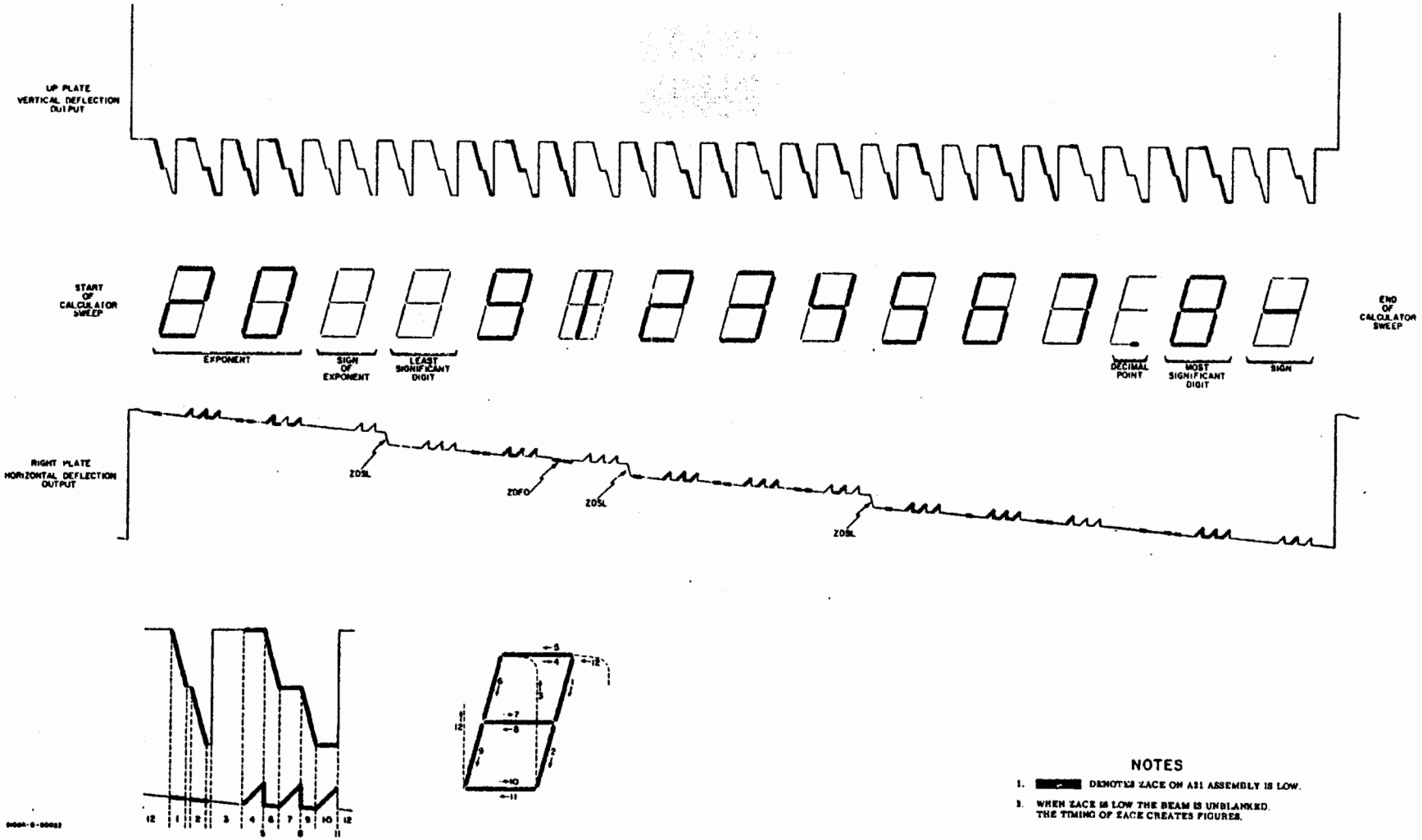

Figure 21. Composite Standard Horizontal and Vertical Deflection Waveforms

THE CALCULATOR DISPLAY

Figure 21 illustrates the use of the Horizontal and Vertical Deflection Amplifiers' output in the generation of a floating calculator display. The figure illustrates the display of one register; however, the remaining registers will be displayed in essentially the same way, depending on the characters being displayed.

When discussing the display generation, several factors must be considered at the same time. These are register and character sweep and CRT unblanking. For purposes of explanation, these factors will be discussed separately.

The register sweep starts with the least significant exponent digit (assuming floating point) of the X register and finishes with the most significant digit of the Z register. Each register is swept from right to left (as the CRT is faced from the keyboard) in an X, Y, Z order. Each register is completely swept before going to the next register.

Character generation occurs during register generation. The character generated by the Horizontal and Vertical Deflection Amplifiers is the figure "8", this can be seen in the small drawing near the bottom of Figure 21.

The display is normally blanked; characters are then generated by unblanking the required segments of the basic figure "8". The CRT is unblanked by the signal ZACE on the A21 assembly.

A failure of the High Voltage Board or some other part of the power supply may be repaired by referring to the Theory of Operation and Troubleshooting Procedure given below. The development is referenced to the schematic of the A20 and A21 assemblies (Figure 23) and assumes all other assemblies are functioning properly.

THEORY OF OPERATION

The A20 and A21 assemblies work together to supply the calculator with +220V, +78V, +34V, −15V and −3500V.

The +220V is supplied by rectifier A21CR1 and filter A20C1. A21R1 taps this supply for use as the astigmatism control. The +78V is supplied by rectifier A21CR2 and filter A21C2. A21R6 and A21CR4 form a zener regulated supply filtered by A21C3.

A20CR1, A20CR2, A20C2 and A20R2 rectify and filter the output of A20T1 for use by the −15V supply. In this supply, A21Q4 senses the deviation of the −15V supply through A21CR3. These deviations are coupled to the Darlington pair A20Q1 and A21Q3. A20Q1 acts as a series regulator for the supply.

−3500 Volt Power Supply:
The −3500 Volt Supply consists of oscillator and rectification/filter circuits. Basically, the oscillator is a free running blocking oscillator with feedback circuits which control the amplitude of oscillations. The oscillator consists of A20A2Q1, A20A2T1, and A20A2C1. The feedback is furnished by A21Q5 and associated circuits.

At turn-on A20A2C1 has no charge, A21Q5 is saturated. A20A2Q1 with −15V on the emitter and ground on the base conducts, building a field in winding A (see Figure 22). This field coupled to winding B makes the base of A20A2Q1 go more positive. A20A2C1 begins to charge to the voltage of winding B. This continues until A20A2Q1 is at maximum conduction and current through winding A stops increasing. The field of winding C begins to collapse, the base of A20A2Q1 goes negative and A20A2Q1 is cut off by A20A2C1. A21Q5 has feedback now and is no longer saturated.

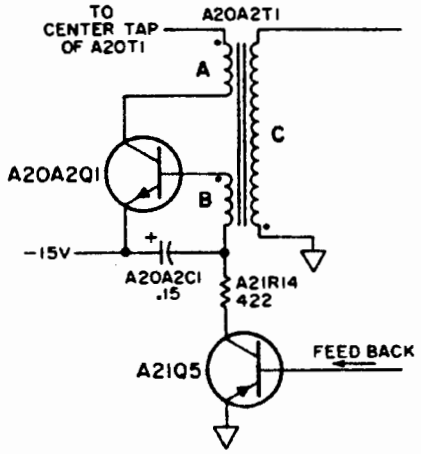

Figure 22. −3500 Volt Power Supply Oscillator

A20A2C1 discharges (a small amount) through A21Q5. The oscillator is now in the negative phase. When the oscillator re enters the positive phase, the base of A20A2Q1 will go positive and at some time overcome the reverse bias of A20A2C1. When this happens, A20A2Q1 will conduct again and A20A2C1 will recharge.

A21Q5 controls the amount of time A20A2Q1 is conducting. The energy restored to the oscillator is directly proportional to the amount of time A20A2Q1 conducts. If the voltage at the top of A20A2R8 goes less negative (more load) A21Q5 conducts more and A20A2Q1 conducts longer, restoring energy to the oscillator. The frequency of the oscillator is approximately 25KHz. The frequency is established by the inductance and capacitance of A20A2T1, not the charge of A20A2C1.

The output of A20A2T1 is rectified by A20A2CR1. A20A2C2, A20A2C3 and A20A2R3 are filters. A voltage divider senses the –3500V and compares it to the +34.8V. A portion of this different voltage is fed to A21Q2, and fed to the base of A21Q5 to control the discharge of A20A2C1.

CRT Unblanking:
Another function performed by the A20/A21 assembly is that of blanking the CRT. A20A2R1 (INTENSITY ADJ) senses the output of A20A2T1. This ripple is fed to A20A2CR2, A20A2CR3, A20A2C4 and A20A2C5. These components function as a voltage doubler referenced to the –3500V supply. The output of the voltage doubler biases the control grid of the CRT 80V more negative than the cathode. ZACE appearing at the base of A21Q1 will cause the collector to swing to 34.8V. This positive pulse is coupled to the grid of the CRT by A20A2C8 unblanking the CRT.

A20A2CR4 is a protective device. If the grid of the CRT should be shorted to ground A20A2CR4 would clamp the –3500V to ground. This will prevent arcing in the CRT.

TROUBLESHOOTING PROCEDURE

Blowing Fuses:

The components which will cause a fuse to blow are listed below the fuse.

F1 blowing:

1. shorted A20T1
2. shorted A20CR1
3. shorted A20CR2
4. shorted A20C2
5. wires shorted together or to chassis ground

To locate trouble, disconnect the calculator from the 115V source. Replace F1 and switch the calculator ON. Measure ohms of the primary by connecting a meter across the high and low sides of A20J1. If the meter indicates about 2.5 ohms, the primary circuit is good. If the meter indicates a short remove the fuse and measure again. If the meter indicates an open, the primary of the transformer is probably shorted. If the meter had indicated a short there are wiring problems. Remove F2 and F3. Connect the meter to the cathodes of A20CR1 and A20CR2. The meter will indicate about .27 ohms if that section of the secondary is good. Connect the meter between XA21 pin 1 and chassis ground. If that section of the secondary is good the meter will indicate approximately 65 ohms. Disconnect the yellow wire from A20A2 pin 9. Connect the meter between the yellow wire and the brown wire on A20T1. If that section of A20T1 is good the meter will indicate approximately 1.45 ohms. Remove the sockets from DS1, DS2 and DS3, at this time ensure the pins on the sockets are not touching. Connect the meter between XA21 pin 12 and ground. If the meter indicates about 15K ohms the wiring between F3 and the anode side of A20CR2 is good. At this point the only components remaining are A20CR1, A20CR2 and A20C2. One of these components is probably shorted. If these check good, there is a chance that the high side of the 115V line is touching chassis ground.

F2 blowing:

1. A20Q1
2. wiring short

If the A21 assembly is good, replace A20Q1. If F2 is still blowing, ensure the pins on XDS1, XDS2 and XDS3 are not touching. At this point one must assume the load on the supply is too great. Disconnect the connector to the bottom electronics package, remove the A15 and A16 assembly, disconnect the A20A2 assembly. If the fuse holds at this point there is a short in one of these assemblies; reconnect them one at a time until the fuse blows. If the fuse blows with all of the assemblies disconnected, there is a wiring short.

F3 blowing:
This is a difficult problem. Ohms checks on this supply are not valid. A20A2T1 can pass an ohms check and still have high voltage shorts. Use a substitution method to troubleshoot this supply. Since A20A2Q1 has often caused high voltage problems change that first. A20A2C2 and A20A2C3 can be checked by disconnecting them (one at a time) from ground.

MISSING VOLTAGES:
If more than one supply is missing the primary of A20T1 may be open. To check: disconnect the instrument from 115V, switch instrument ON. Connect an ohmmeter across the high and low sides of the power plug; if the primary is good, the meter will indicate approximately 2.5 ohms. If it indicates an open, short the black and black/red wires on the primary and measure again. If the primary is open the meter will indicate zero ohms.

Missing +220V:
Remove the A21 assembly. Measure between XA21 pin 1 and ground. If the meter indicates approximately 168V AC that winding of A20T1 is good.

Missing +78 or +34.8V:
Remove the A21 assembly. Measure between XA21 pin 2 and ground. If the meter indicates approximately 70V AC that winding of A20T1 is good.

Missing −15V:
If the A21 assembly is good, measure the collector of A20Q1. The reading should be approximately +6V DC. If the reading is 0V, measure from the cathode of A20CR1 to ground. The meter should indicate 26.5V AC. If the reading is bad there is an open in the secondary of A20T1. Connect the meter to the cathode of A20CR2 and ground. The meter should indicate 26.5V AC. Ohms check A20CR1, A20CR2 and A20C2; if these are good, change A20Q1.

Missing −3500V:
The most probable cause of trouble in this assembly is A20A2Q1. The voltage at the junction of A20A2T1 and A20A2C1 should be −20V DC. The collector of A20A2Q1 should read about +4.9 to +5.5V DC.

Extensive repair on the High Voltage Board (A20A2) will necessitate that the protective coating on the board be renewed. If this becomes necessary, return the board to Loveland Division, attention Calculator Customer Service. The board will be treated with the electrical sealant and returned for future use. Any board which has not been treated may be handled in the same fashion.

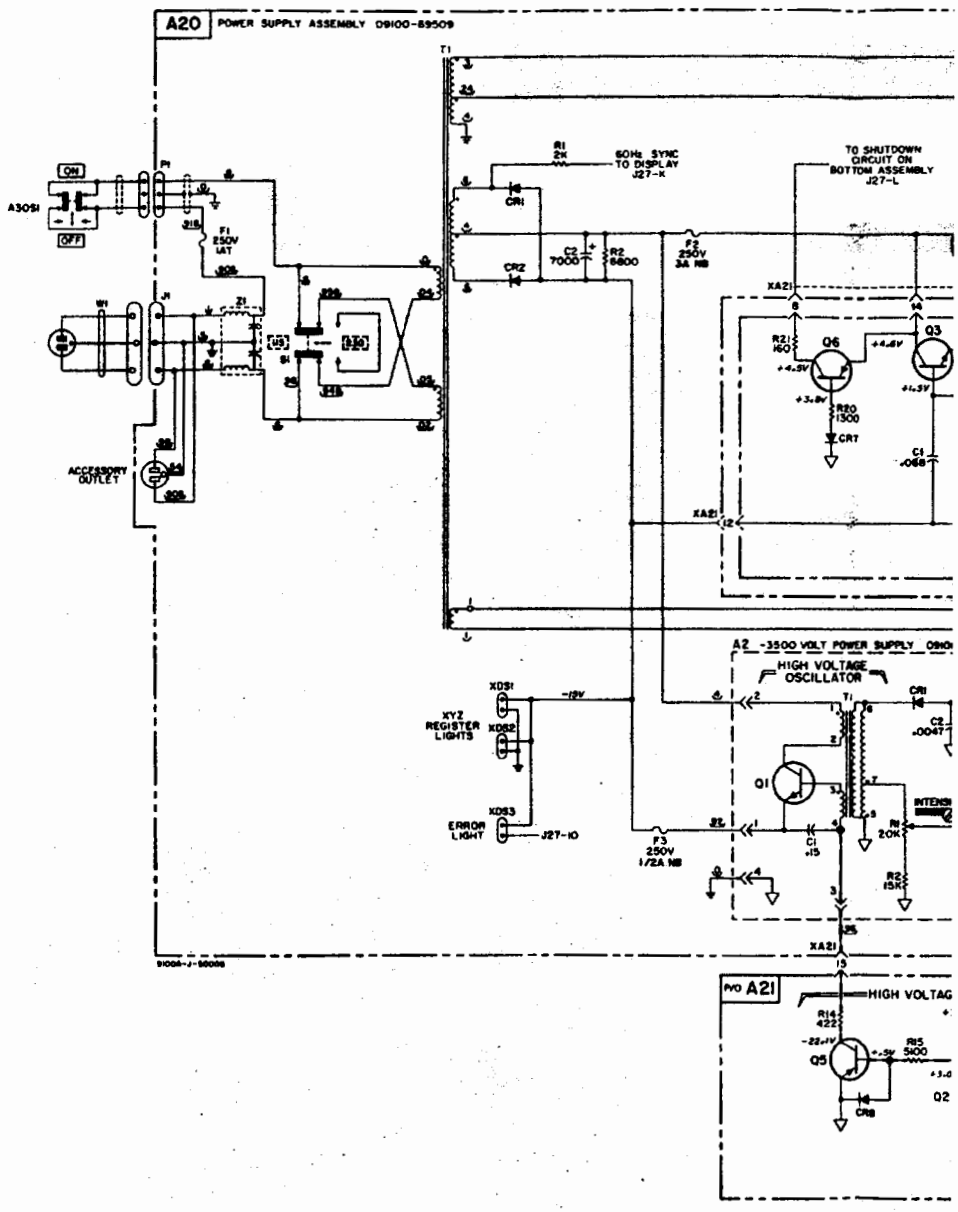

NOTES

1. PARTIAL REFERENCE DESIGNATIONS ARE SHOWN. PREFIX WITH ASSEMBLY OR SUBASSEMBLY DESIGNATION(S) OR BOTH FOR COMPLETE DESIGNATION.
2. COMPONENT VALUES ARE SHOWN AS FOLLOWS UNLESS OTHERWISE NOTED.

   RESISTANCE IN OHMS
   CAPACITANCE IN MICROFARADS
3. ⏚ DENOTES POWER LINE GROUND; 9100A CHASSIS.
   ▽ DENOTES GROUND ON PRINTED CIRCUIT ASSEMBLY.
4. ——— — — ——— DENOTES ASSEMBLY.

   — — — — — — — DENOTES SUBASSEMBLY.
5. ⊘ DENOTES SCREWDRIVER ADJUST.
6. 324 DENOTES WIRE COLOR: COLOR CODE SAME AS RESISTOR COLOR CODE. FIRST NUMBER IDENTIFIES BASE COLOR, SECOND NUMBER IDENTIFIES WIDER STRIP, THIRD NUMBER IDENTIFIES NARROWER STRIP. (e.g. 324 = WHITE, RED, YELLOW.)
7. DC VOLTAGES WERE MEASURED WITH W IN X, Y, & Z, IN FLOATING NOTATION.

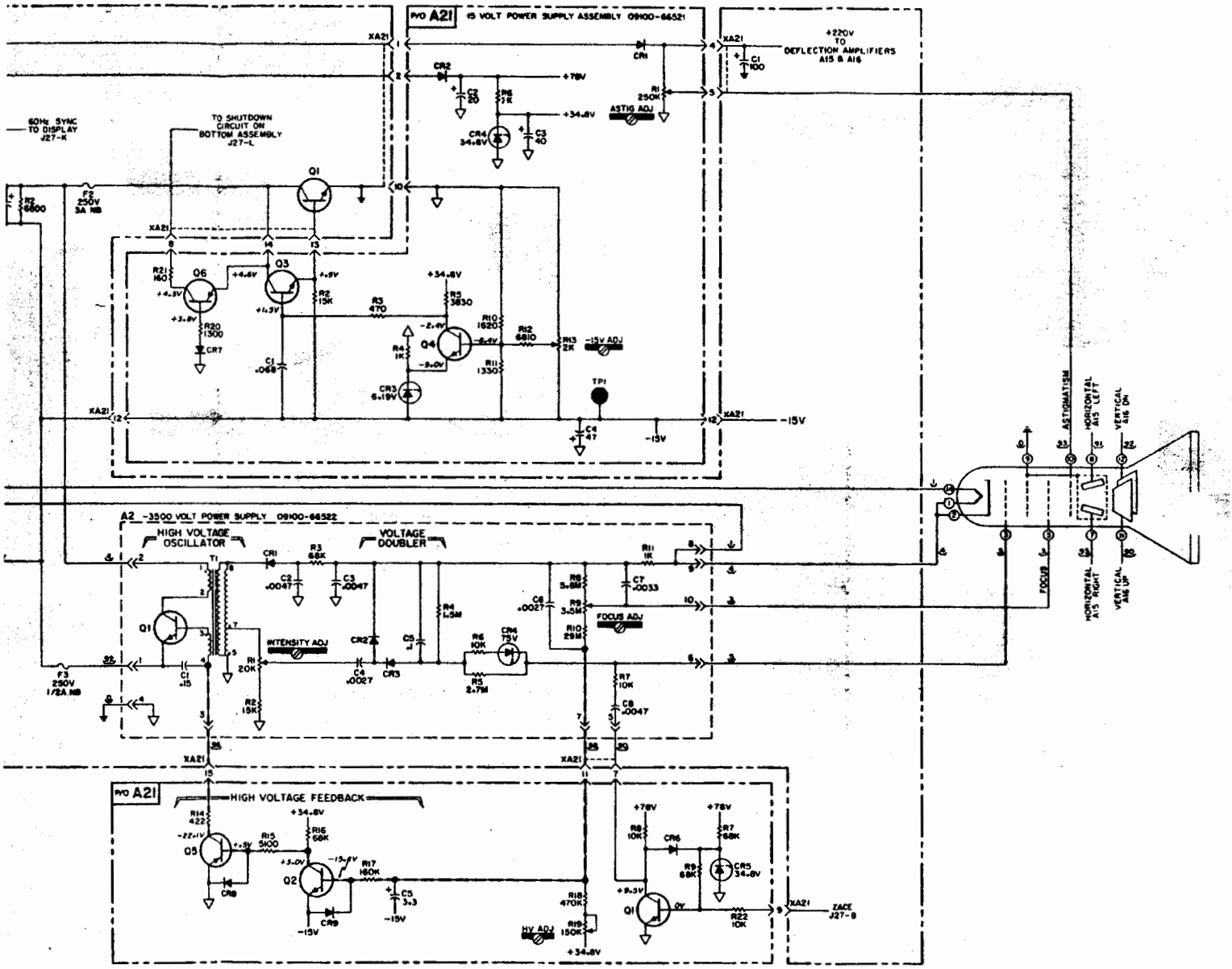

Figure 23. Standard −15V and −3500V Power Supply Schematic

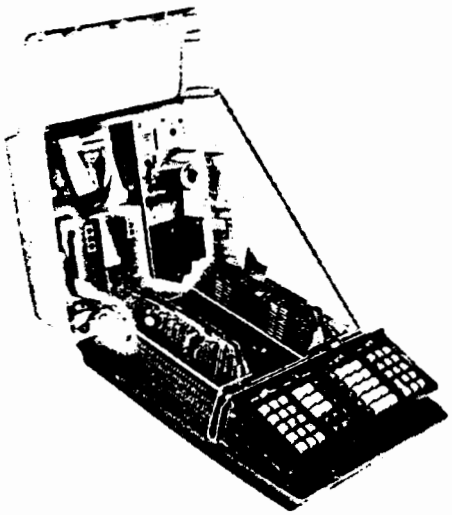

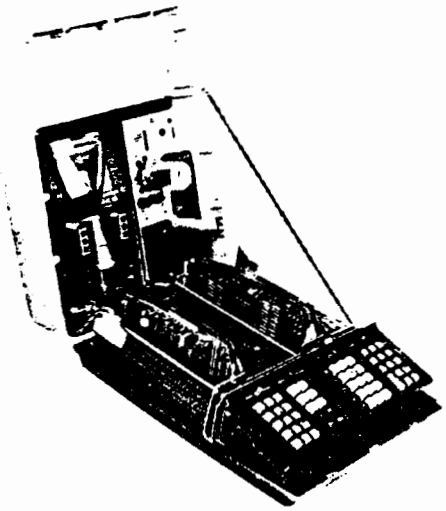

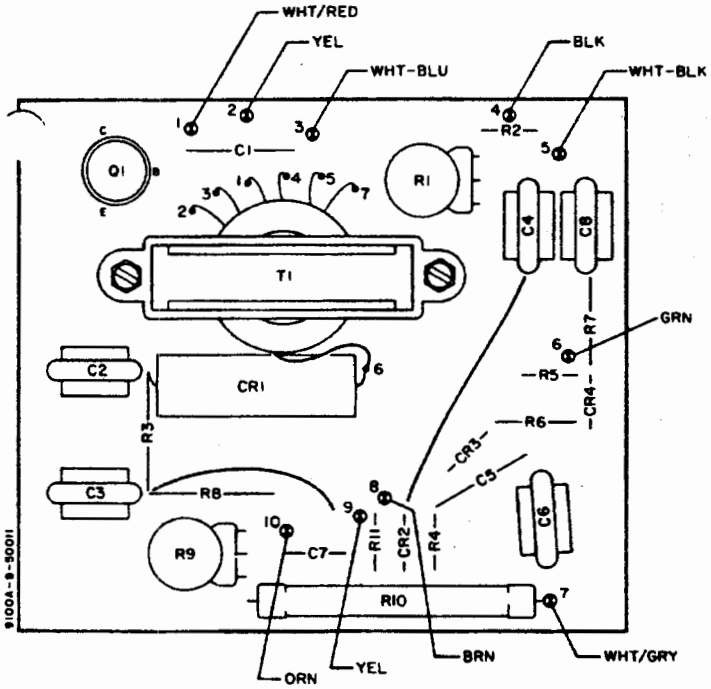

A20A2
hp Part No. 09100-66522
REV A

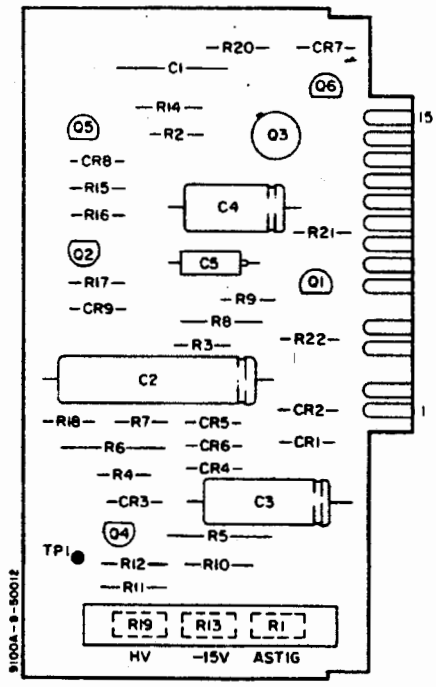

A21
hp Part No. 09100-66521
REV C

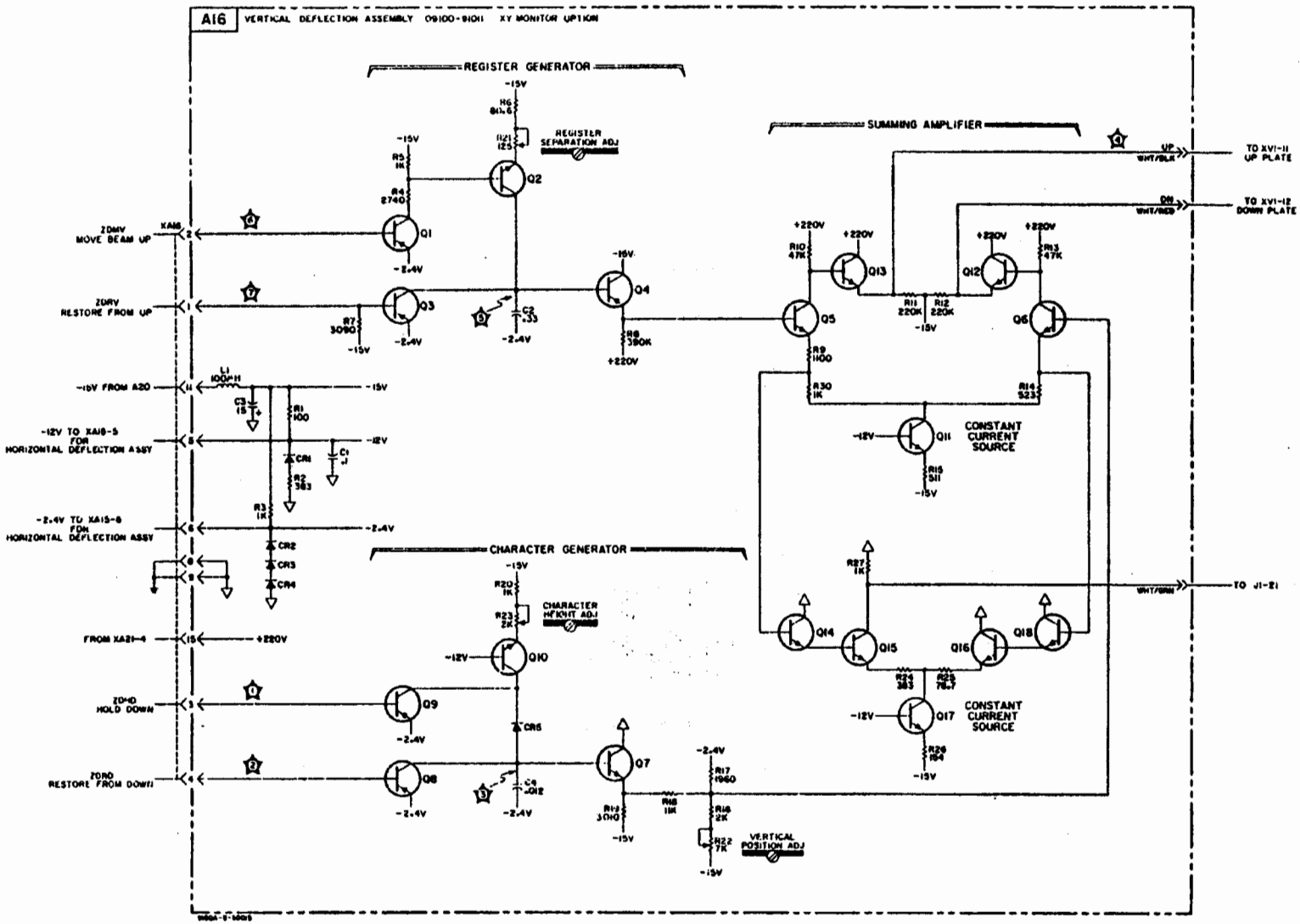

Figure 24. Optional (Current) Vertical Deflection Amplifier Schematic

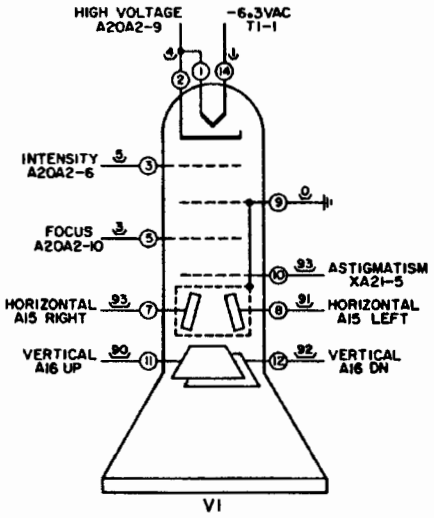

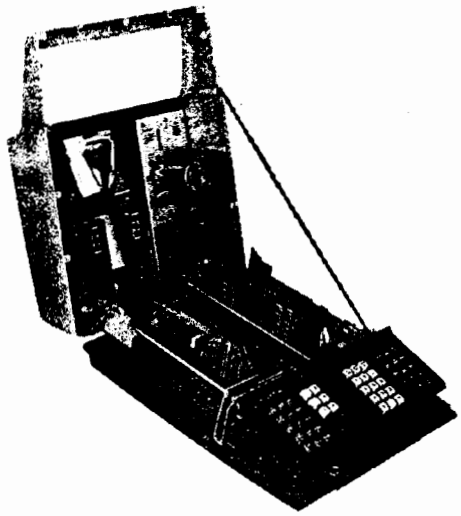

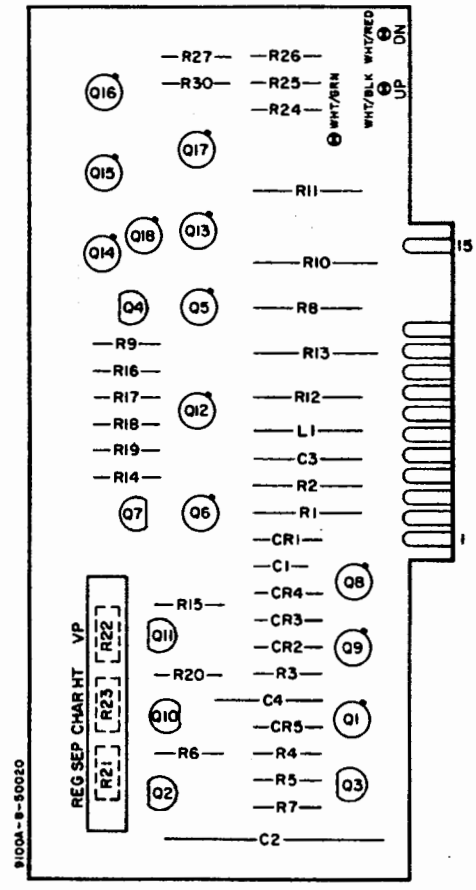

OPTION
A16
hp Part No. 09100-91011
REV A

NOTES

1. PARTIAL REFERENCE DESIGNATIONS ARE SHOWN. PREFIX WITH ASSEMBLY OR SUBASSEMBLY DESIGNATION(S) OR BOTH FOR COMPLETE DESIGNATION.

2. COMPONENT VALUES ARE SHOWN AS FOLLOWS UNLESS OTHERWISE NOTED.

   RESISTANCE IN OHMS
   CAPACITANCE IN MICROFARADS

3. ⏚ DENOTES POWER LINE GROUND; 9100A CHASSIS.
   ▽ DENOTES GROUND ON PRINTED CIRCUIT ASSEMBLY.

4. ——— – – ——— DENOTES ASSEMBLY.

   — — — — — — — DENOTES SUBASSEMBLY.

5. ▬⊘ DENOTES SCREWDRIVER ADJUST.

6. 924 DENOTES WIRE COLOR; COLOR CODE SAME AS RESISTOR COLOR CODE. FIRST NUMBER IDENTIFIES BASE COLOR, SECOND NUMBER IDENTIFIES WIDER STRIP, THIRD NUMBER IDENTIFIES NARROWER STRIP.
   (e.g. 924, • WHITE, RED, YELLOW.)

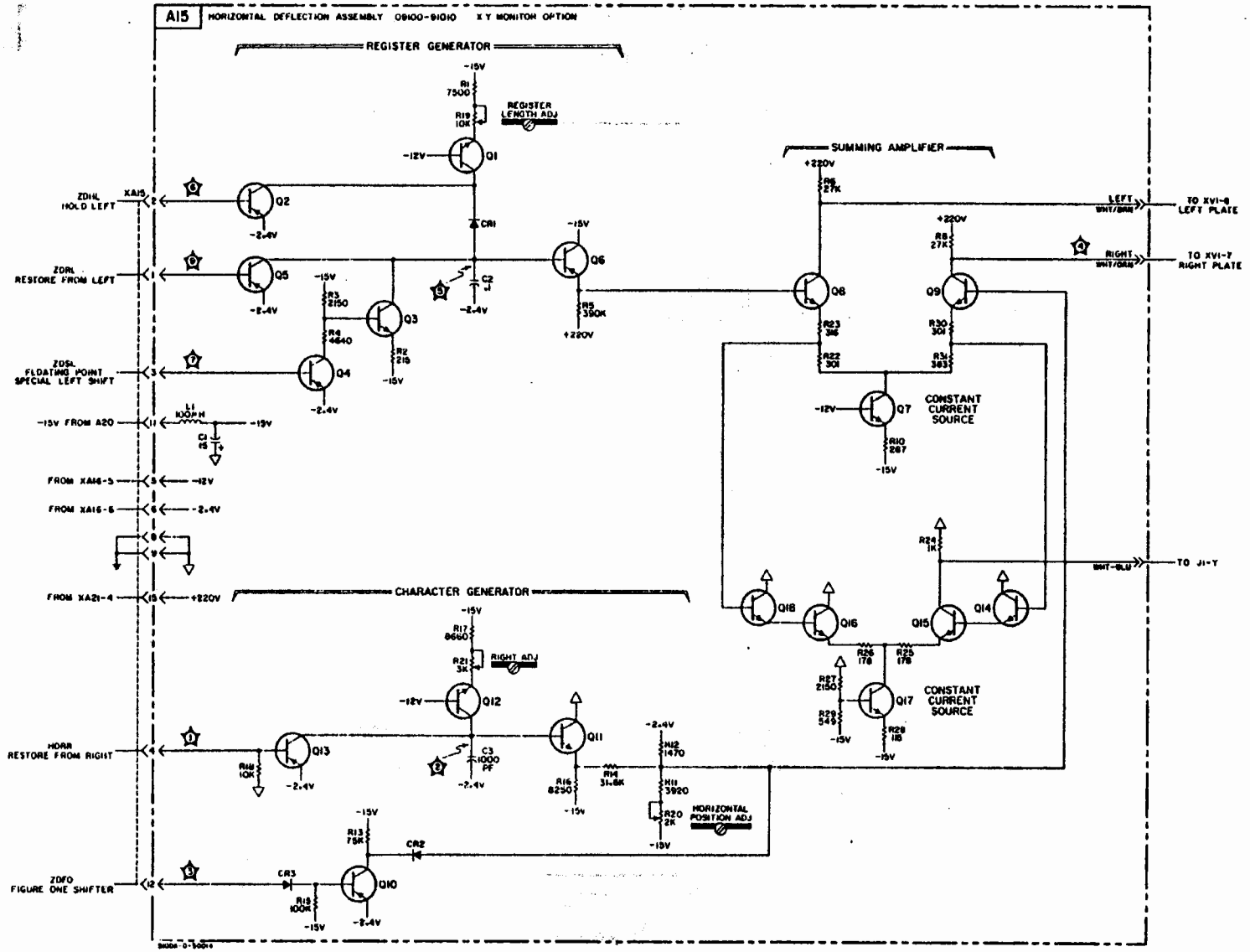

Figure 25. Optional (Current) Horizontal Deflection Amplifier Schematic

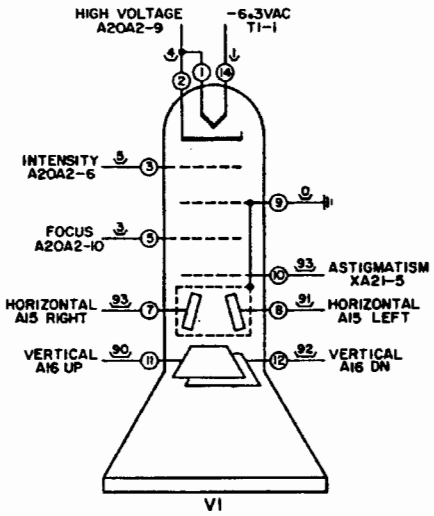

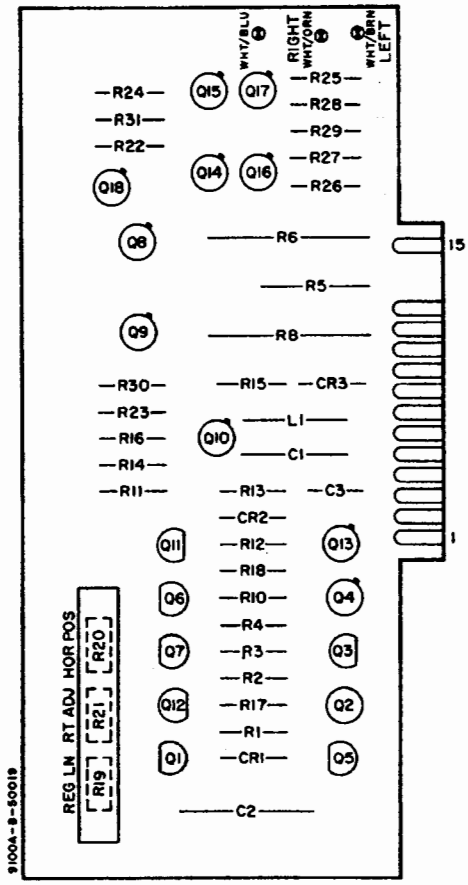

OPTION
A15
hp Part No. 09100-91010
REV A

NOTES

1. PARTIAL REFERENCE DESIGNATIONS ARE SHOWN. PREFIX WITH ASSEMBLY OR SUBASSEMBLY DESIGNATION(S) OR BOTH FOR COMPLETL DESIGNATION.
2. COMPONENT VALUES ARE SHOWN AS FOLLOWS UNLESS OTHERWISE NOTED.

   RESISTANCE IN OHMS
   CAPACITANCE IN MICROFARADS
3. ⏚ DENOTES POWER LINE GROUND; 9100A CHASSIS.
   ▽ DENOTES GROUND ON PRINTED CIRCUIT ASSEMBLY.
4. ——— - - ——— DENOTES ASSEMBLY.

   — — — — — — DENOTES SUBASSEMBLY.
5. ▬⌀ DENOTES SCREWDRIVER ADJUST.
6. 924 DENOTES WIRE COLOR; COLOR CODE SAME AS RESISTOR COLOR CODE. FIRST NUMBER IDENTIFIES BASE COLOR, SECOND NUMBER IDENTIFIES WIDER STRIP, THIRD NUMBER IDENTIFIES NARROWER STRIP. (e.g. 924 = WHITE, RED, YELLOW.)

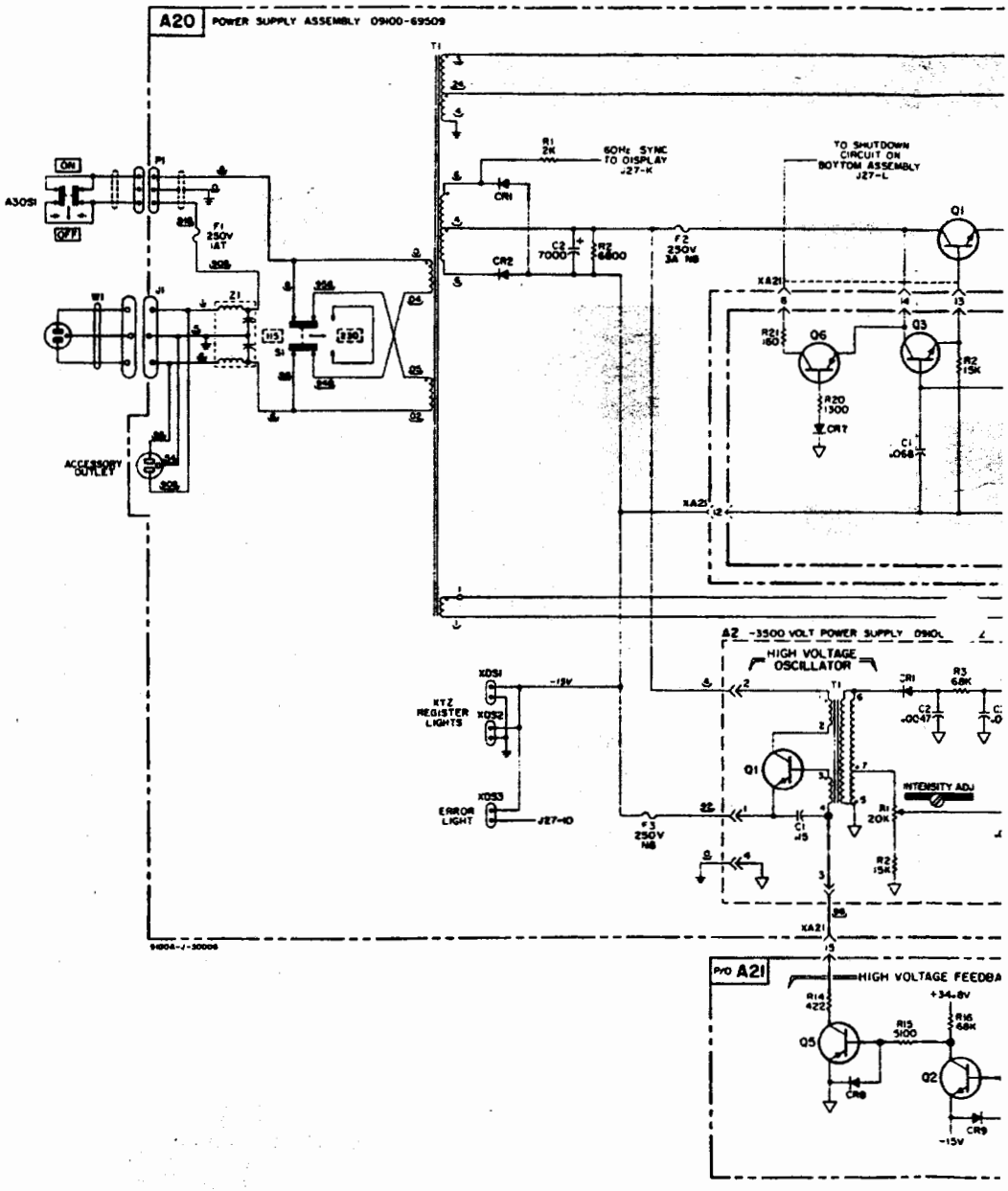

NOTES

1. PARTIAL REFERENCE DESIGNATIONS ARE SHOWN. PREFIX WITH ASSEMBLY OR SUBASSEMBLY DESIGNATION(S) OR BOTH FOR COMPLETE DESIGNATION.
2. COMPONENT VALUES ARE SHOWN AS FOLLOWS UNLESS OTHERWISE NOTED.

   RESISTANCE IN OHMS
   CAPACITANCE IN MICROFARADS
3. ↓ DENOTES POWER LINE GROUND; 9100A CHASSIS.
   ▽ DENOTES GROUND ON PRINTED CIRCUIT ASSEMBLY.
4. ——— — — ——— DENOTES ASSEMBLY.
   — — — — — — DENOTES SUBASSEMBLY.
5. ▬▬ DENOTES SCREWDRIVER ADJUST.
6. 924 DENOTES WIRE COLOR: COLOR CODE SAME AS RESISTOR COLOR CODE. FIRST NUMBER IDENTIFIES BASE COLOR, SECOND NUMBER IDENTIFIES WIDER STRIP, THIRD NUMBER IDENTIFIES NARROWER STRIP. (e.g. 924 = WHITE, RED, YELLOW.)

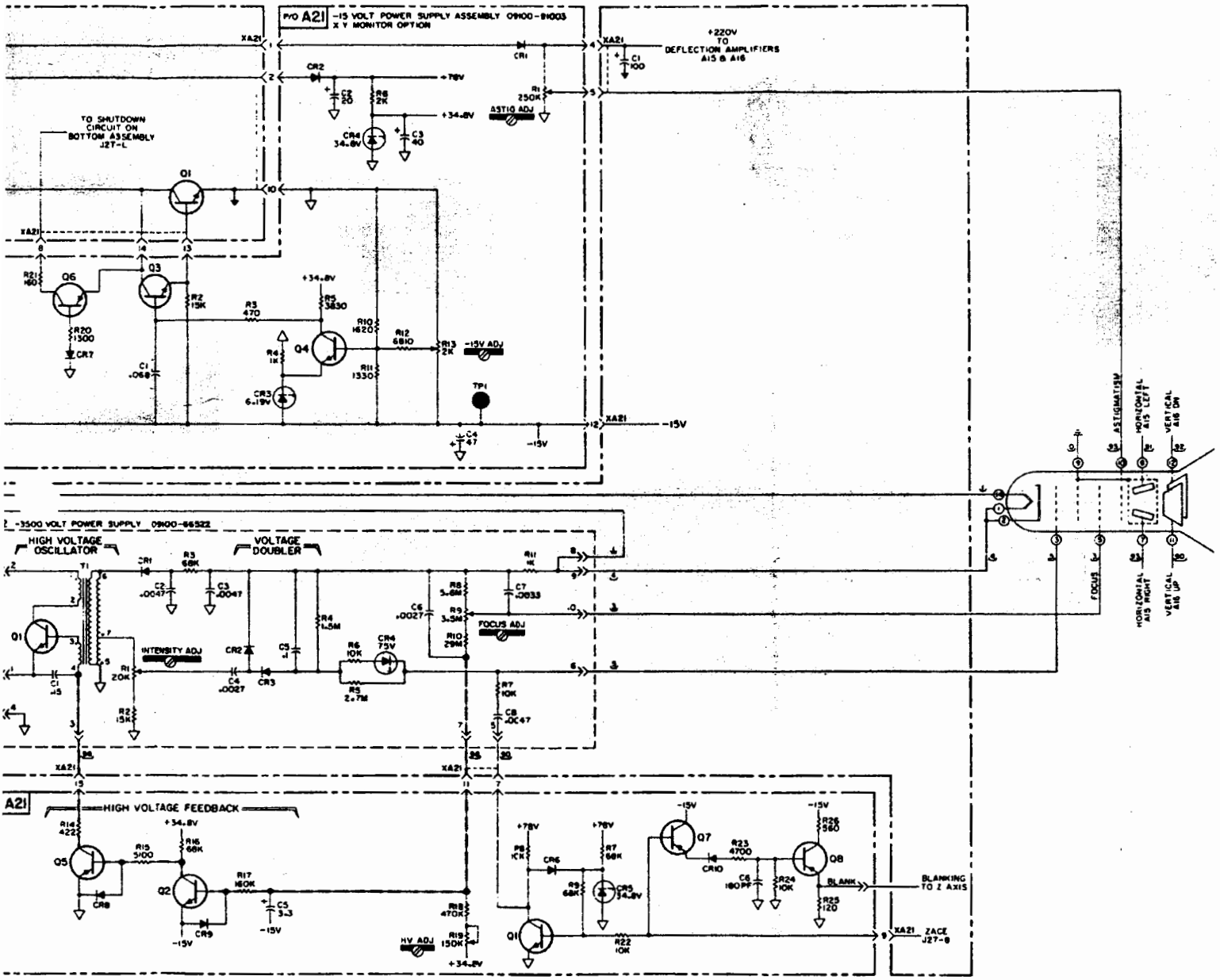

Figure 26. −3500V and Optional (Voltage and Current) −15V Power Supply Sch

X-Y MONITOR DISPLAY OPTION
VOLTAGE SOURCE

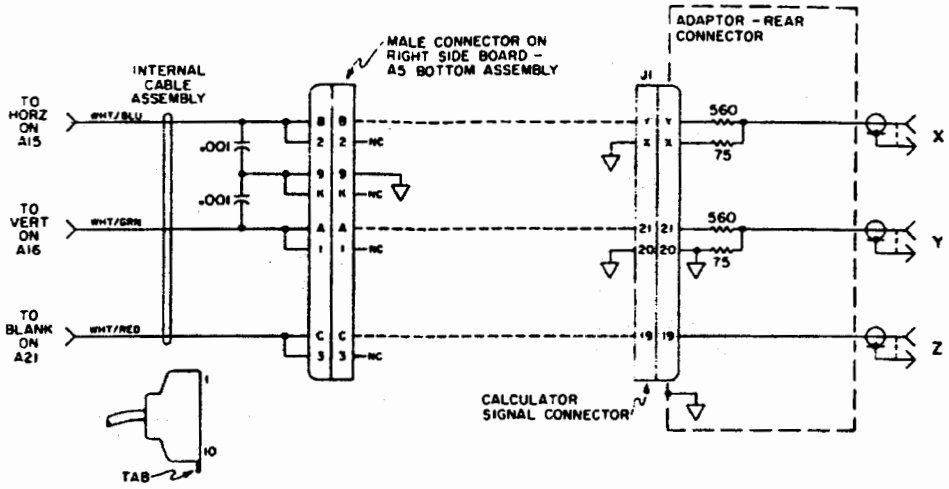

X-Y MONITOR DISPLAY OPTION
CURRENT SOURCE

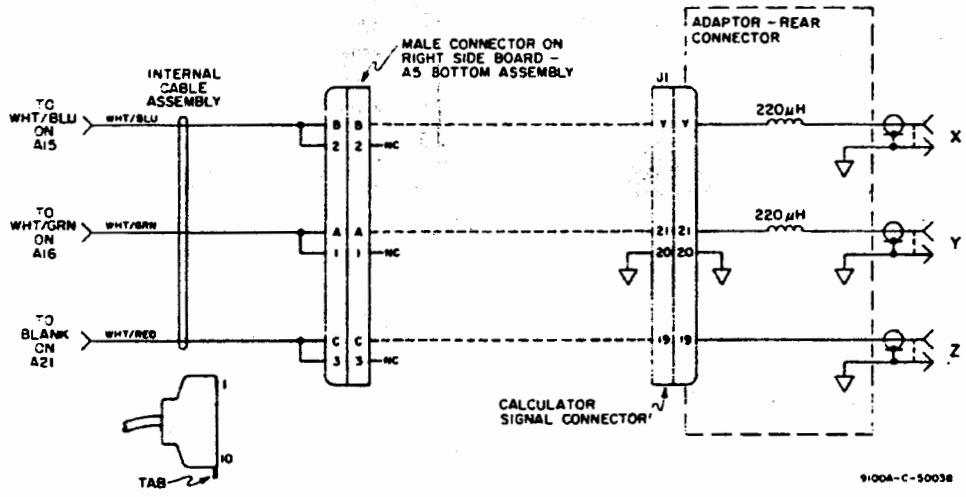

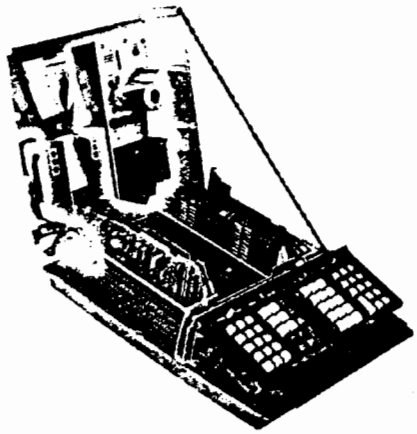

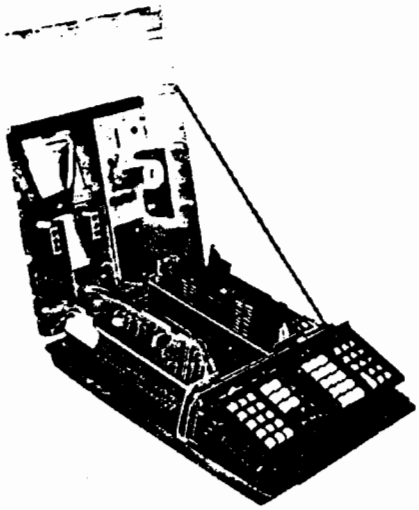

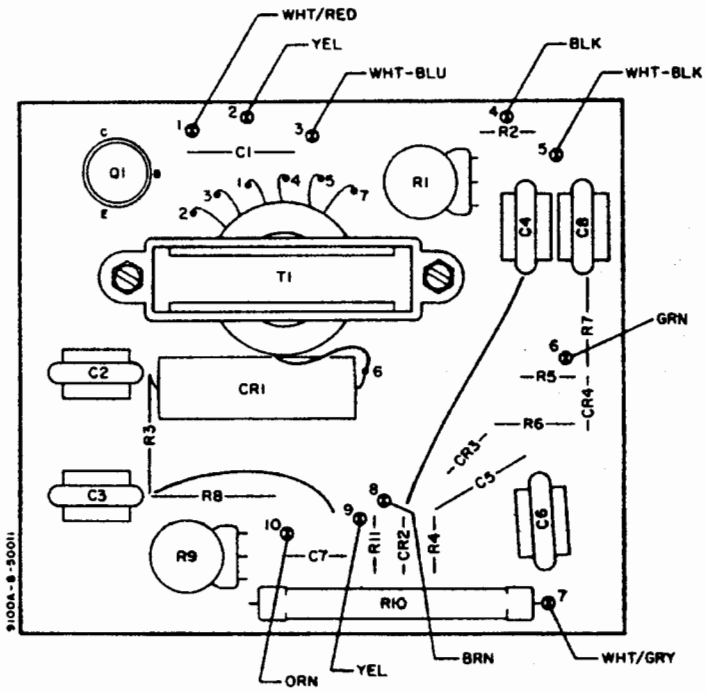

A20A2
hp Part No. 09100-66522
REV A

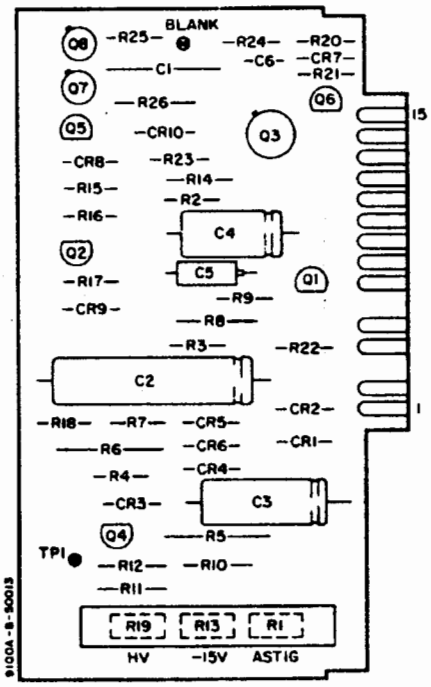

OPTION
A21
hp Part No. 09100-91003
REV A

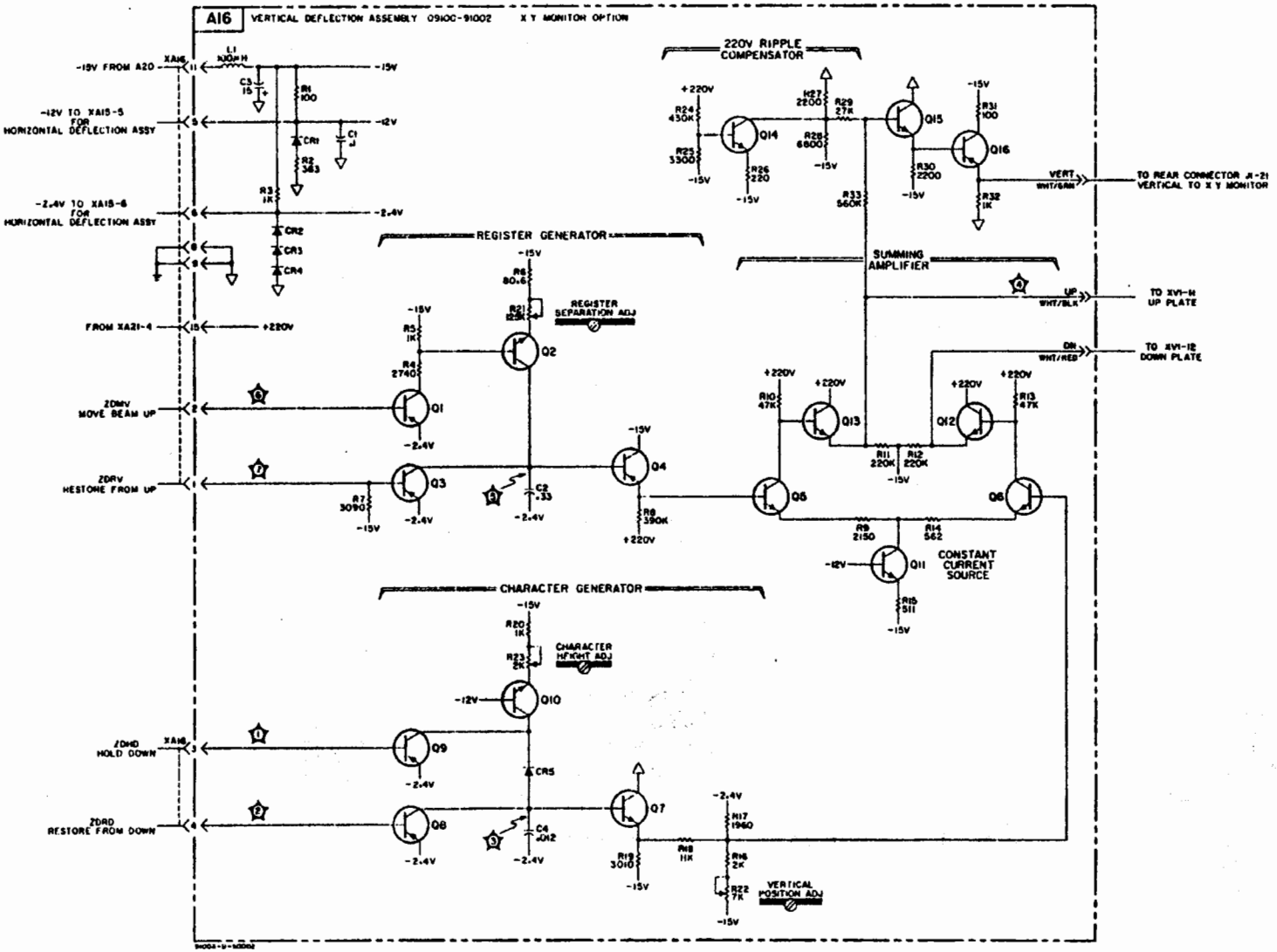

Figure 27. Optional (Voltage) Vertical Deflection Amplifier Schematic

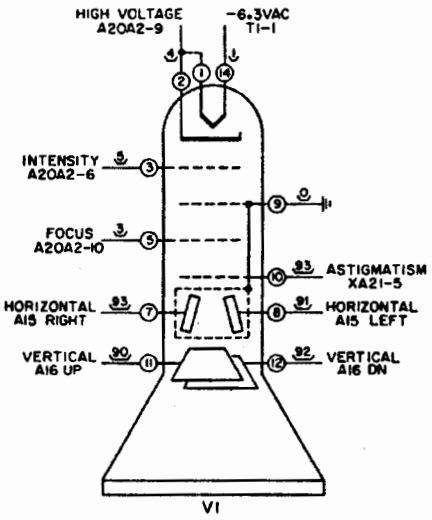

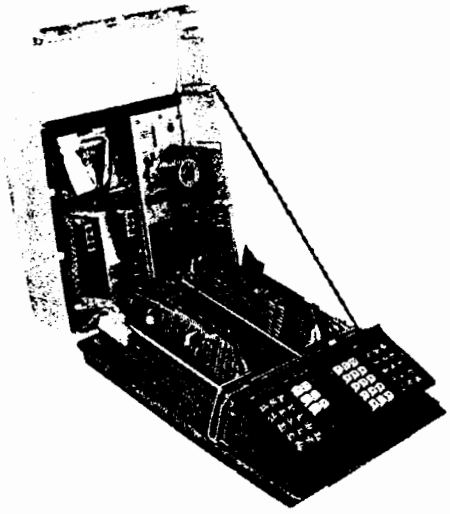

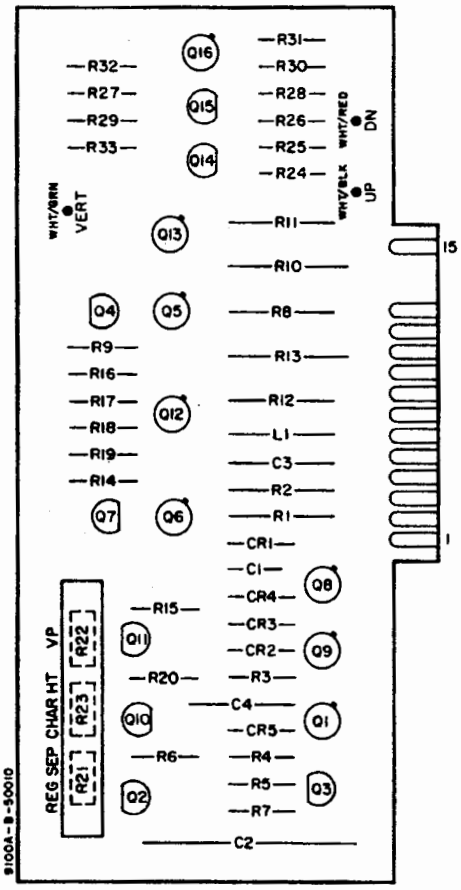

OPTION
A16
hp Part No. 09100-91002
REV A

NOTES

1. PARTIAL REFERENCE DESIGNATIONS ARE SHOWN. PREFIX WITH ASSEMBLY OR SUBASSEMBLY DESIGNATION(S) OR BOTH FOR COMPLETE DESIGNATION.

2. COMPONENT VALUES ARE SHOWN AS FOLLOWS UNLESS OTHERWISE NOTED.

   RESISTANCE IN OHMS
   CAPACITANCE IN MICROFARADS

3. ⏚ DENOTES POWER LINE GROUND; 9100A CHASSIS.
   ▽ DENOTES GROUND ON PRINTED CIRCUIT ASSEMBLY.

4. ——— – – ——— DENOTES ASSEMBLY.

   — — — — — — — DENOTES SUBASSEMBLY.

5. ▬⊘ DENOTES SCREWDRIVER ADJUST.

6. 924 DENOTES WIRE COLOR: COLOR CODE SAME AS RESISTOR COLOR CODE. FIRST NUMBER IDENTIFIES BASE COLOR, SECOND NUMBER IDENTIFIES WIDER STRIP, THIRD NUMBER IDENTIFIES NARROWER STRIP.
   (e.g. 924 = WHITE, RED, YELLOW.)

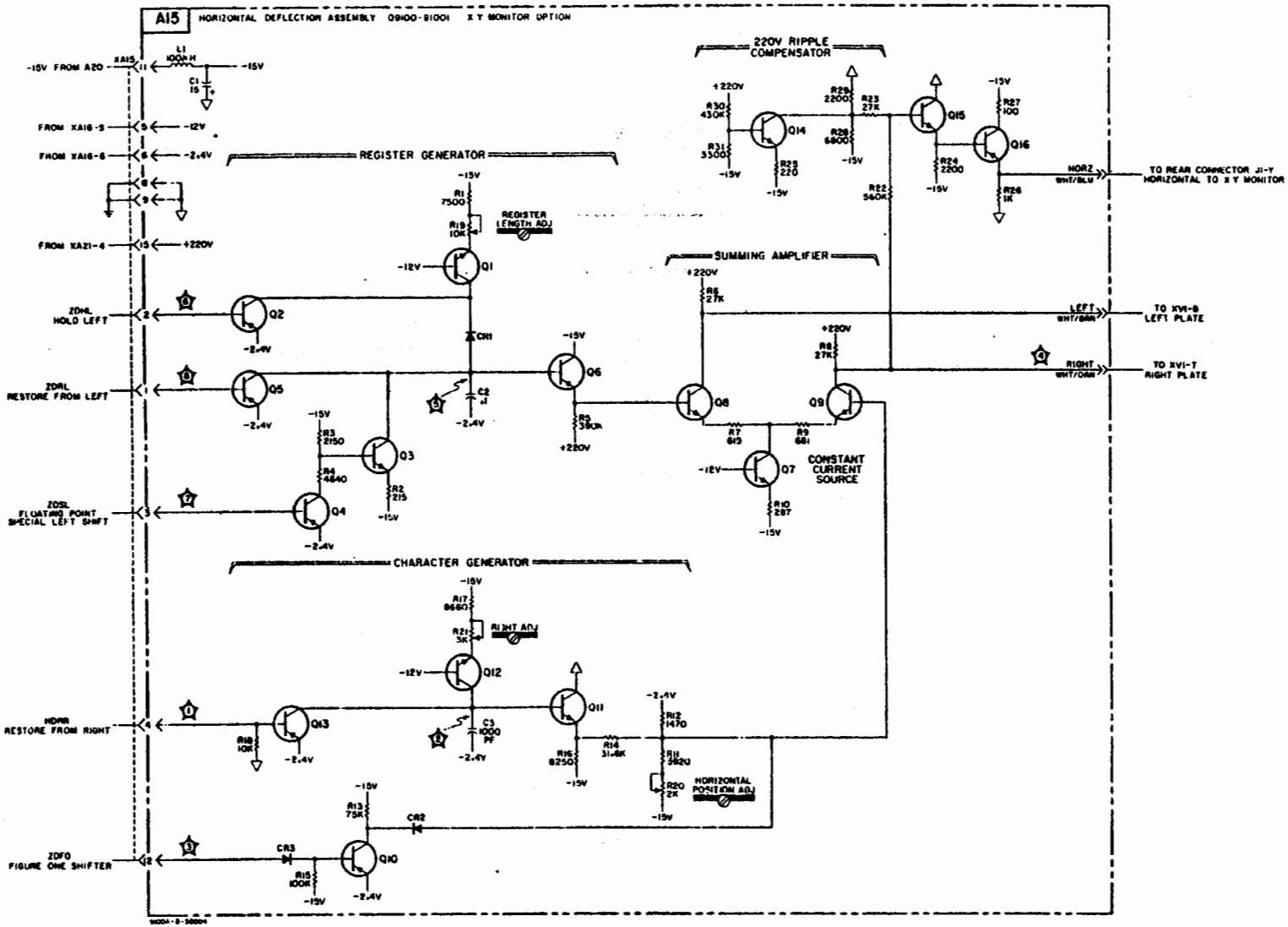

Figure 28. Optional (Voltage) Horizontal Deflection Amplifier Schematic

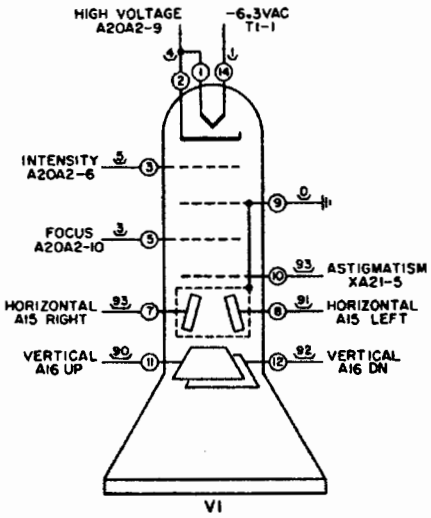

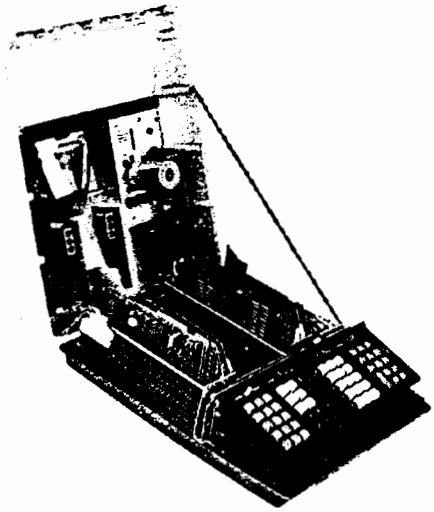

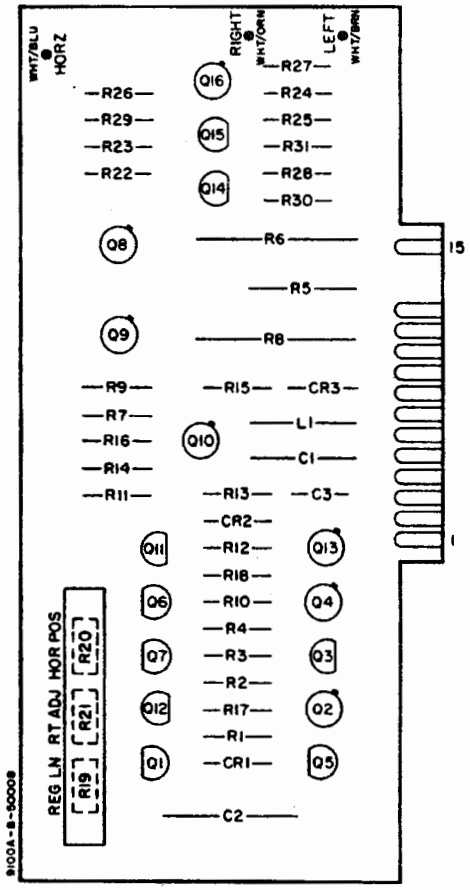

OPTION
A15
hp Part No. 09100-91001
REV A

NOTES

1. PARTIAL REFERENCE DESIGNATIONS ARE SHOWN. PREFIX WITH ASSEMBLY OR SUBASSEMBLY DESIGNATION(S) OR BOTH FOR COMPLETE DESIGNATION.

2. COMPONENT VALUES ARE SHOWN AS FOLLOWS UNLESS OTHERWISE NOTED.

   RESISTANCE IN OHMS
   CAPACITANCE IN MICROFARADS

3. ⏚ DENOTES POWER LINE GROUND; 9100A CHASSIS.
   ▽ DENOTES GROUND ON PRINTED CIRCUIT ASSEMBLY.

4. ——— — — ——— DENOTES ASSEMBLY.

   — — — — — — — DENOTES SUBASSEMBLY.

5. ▬⊘▬ DENOTES SCREWDRIVER ADJUST.

6. 924 DENOTES WIRE COLOR; COLOR CODE SAME AS RESISTOR COLOR CODE. FIRST NUMBER IDENTIFIES BASE COLOR, SECOND NUMBER IDENTIFIES WIDER STRIP, THIRD NUMBER IDENTIFIES NARROWER STRIP. (e.g. 924 = WHITE, RED, YELLOW.)

This section contains information for ordering replacement parts. The replaceable Parts List contains parts in alphameric order of their reference designators and indicates the description, -hp- part number, together with any applicable notes, and provides the following:

a. Total quantity used on the assembly (TQ Column). The total quantity of a part is given the first time the part number appears.

b. Description of the part. (See list of abbreviations below).

c. Typical manufacturer of the part in a five-digit code. (See Appendix C for list of manufacturers.)

d. Manufacturer's part number.

To obtain replacement parts, address order or inquiry to your local Hewlett-Packard Field Office. (See Appendix D for list of office locations.) Identify parts by their Hewlett-Packard part number. Include instrument model and serial numbers.

To obtain a part that is not listed, include:

a. Instrument model number.

b. Instrument serial number.

c. Description of the part.

d. Function and location of the part.

ABBREVIATIONS

ABBREVIATIONS

Ag	silver	ID	inside diameter	ns	nanosecond(s) = 10^{-9} seconds	SPDT	single-pole double-throw
Al	Aluminum	impg	impregnated	nsr	not separately replaceable	SPST	single-pole single-throw
A	Ampere(s)	incd	incandescent				
Au	gold	ins	insulation(ed)	Ω	ohm(s)	Ta	tantalum
				obd	order by description	TC	temperature coefficient
C	capacitor	kΩ	kilohm(s) = 10^{+3} ohms	OD	outside diameter	TiO_2	titanium dioxide
cer	ceramic	kHz	kilohertz = 10^{+3} hertz			tog	toggle
coef	coefficient			p	peak	tol	tolerance
com	common	L	inductor	pA	picoampere(s)	trim	trimmer
comp	composition	lin	linear taper	pc	printed circuit	TSTR	transistor
conn	connection	log	logarithmic taper	pF	picofarad(s) = 10^{-12} farads		
						V	volt(s)
dep	deposited	mA	milliampere(s) = 10^{-3} amperes	piv	peak inverse voltage	vacw	alternating current working voltage
DPDT	double-pole double-throw	MHz	megahertz = 10^{+6} hertz	p/o	part of	var	variable
DPST	double-pole single-throw	MΩ	megohm(s) = 10^{+6} ohms	pos	position(s)	vdcw	direct current working voltage
		met flm	metal film	poly	polystyrene		
elect	electrolytic	mfr	manufacturer	pot	potiometer	W	watt(s)
encap	encapsulated	ms	millisecond	p-p	peak-to-peak	w/	with
		mtg	mounting	ppm	parts per million	wiv	working inverse voltage
F	farad(s)	mV	millivolt(s) = 10^{-3} volts	prec	precision (temperature coefficient, long term stability, and/or tolerance)	w/o	without
FET	field effect transistor	μF	microfarad(s)			ww	wirewound
fxd	fixed	μs	microseconds(s)				
		μV	microvolt(s) = 10^{-6} volts	R	resistor	*	optimum value selected at factory, average value shown (part may be omitted)
GaAs	gallium arsenide	my	Mylar®	Rh	rhodium	**	no standard type number assigned (selected or special type
GHz	gigahertz = 10^{+9} hertz			rms	root-mean-square		
gd	guard(ed)	nA	nanoampere(s) = 10^{-9} amperes	rot	rotary		
Ge	germanium	NC	normally closed				
grd	ground(ed)	Ne	neon	Se	selenium		®Dupont de Nemours
		NO	normally open	sect	section(s)		
H	henry(ies)	NPO	negative positive zero (zero temperature coefficient)	Si	silicon		
Hg	mercury			sl	slide		
Hz	hertz (cycle(s) per second)						

DESIGNATORS

A	assembly	FL	filter	Q	transistor
B	motor	HR	heater	QCR	transistor-diode
BT	battery	IC	integrated circuit	R	resistor
C	capacitor	J	jack	RT	theristor
CR	diode	K	relay	S	switch
DL	delay line	L	inductor	T	transformer
DS	lamp	M	meter	TB	terminal board
E	misc electronic part	MP	mechanical part	TC	thermocouple
F	fuse	P	plug	TP	test point
				TS	terminal strip
				V	vacuum tube, neon bulb, photocell, etc.
				W	cable
				X	socket
				XDS	lampholder
				XF	fuseholder
				Y	crystal
				Z	network

Rev H

†	REFERENCE DESIGNATOR	-hp- PART NO.		TQ	DESCRIPTION	MFR.	MFR. PART NO.
					9100A/B COMMON PARTS		
1	A15	09100-66515		1	Board Ass'y: Horizontal Deflection Amplifier	-hp-	
	C1	0180-1746		1	C: fxd tant, 15uf, 20vdcw, 10%	90201	TAS156K020PIC
	C2	0160-3099		1	C: fxd polycarb, 0.10uf, 50vdcw, 10%	84411	Type 463VW
	C3	0160-2735		1	C: fxd mica, 1000pf, 100vdcw, 5%	00853	obd
	CR1 thru CR3	1901-0040		3	Diode: Si	01295	PG512
	L1	9140-0210		1	Coil: Molded Choke, 100UH, 5%, .375 x .155	82142	15-1315-12J
	Q1	5080-4670		2	TSTR: NPN, Si, 2N3904	04713	SPS3611
	Q2	5080-4663		4	TSTR: PNP, Si	04713	SS5651
	Q3	5080-9030		3	TSTR: NPN, Si	04713	SS9333
	Q4	5080-4663			TSTR: PNP, Si	04713	SS5651
	Q5	5080-4658		1	TSTR: PNP, Si, 2N3638	04713	SPS3320
	Q6	5080-4660		1	TSTR: PNP, Si, 2N3906	04713	SPS3612
	Q7	5080-4670			TSTR: NPN, Si, 2N3904	04713	SPS3611
	Q8, Q9	1854-0234		2	TSTR: NPN, Si, 2N3440	86684	obd
	Q10	5080-4663			TSTR: PNP, Si	04713	SS5651
	Q11, Q12	5080-9030			TSTR: NPN, Si	04713	SS9333
	Q13	5080-4663			TSTR: PNP, Si	04713	SS5651
	R1	0757-0440		1	R: fxd flm, 7500 ohms, 1/8W, 1%	14674	C4 T-O
	R2	0698-3441		1	R: fxd flm, 215 ohms, 1/8W, 1%	14674	C4 T-O
	R3	0698-0084		1	R: fxd flm, 2150 ohms, 1/8W, 1%	14674	C4 T-O
	R4	0698-3155		1	R: fxd flm, 4640 ohms, 1/8W, 1%	14674	C4 T-O
	R5	0686-3945		1	R: fxd comp, 390 kilohms, 1/2W, 5%	01121	EB3945
	R6	0764-0007		2	R: fxd met oxide, 27 kilohms, 2W, 5%	14674	C4 2S
	R7	0757-0418		1	R: fxd flm, 619 ohms, 1/8W, 1%	14674	C4 T-O
	R8	0764-0007			R: fxd met oxide, 27 kilohms, 2W, 5%	14674	C4 2S
	R9	0757-0419		1	R: fxd flm, 681 ohms, 1/8W, 1%	14674	C4 T-O
	R10	0698-3443		1	R: fxd flm, 287 ohms, 1/8W, 1%	14674	C4 T-O
	R11	0757-0435		1	R: fxd flm, 3920 ohms, 1/8W, 1%	91637	IMF-1/10-32, T-1
	R12	0757-1094		1	R: fxd flm, 1470 ohms, 1/8W, 1%	91637	IMF-1/10-32, T-1
	R13	0757-0462		1	R: fxd flm, 75 kilohms, 1/8W, 1%	91637	CMF-1/10-32, T-1
	R14	0698-3160		1	R: fxd flm, 31600 ohms, 1/8W, 1%	14674	C4 T-O
	R15	0757-0465		1	R: fxd flm, 100 kilohms, 1/8W, 1%	14674	C4 T-O
	R16	0757-0441		1	R: fxd flm, 8250 ohms, 1/8W, 1%	14674	C4 T-O
	R17	0698-3498		1	R: fxd flm, 8660 ohms, 1/8W, 1%	14674	C4 T-O
	R18	0757-0442		1	R: fxd flm, 10 kilohms, 1/8W, 1%	14674	C4 T-O
	R19 thru R21	2100-2533		1	R: Set, var. comp, 10K/2K/3K, 20%	71590	Series 70-3
2	A16	09100-66516		1	Board Ass'y: Vertical Deflection Amplifier	-hp-	
	C1	0150-0121		1	C: fxd cer, 0.1uf, 50vdcw, −20 +80%	56289	SG-50B1-CML
	C2	0160-2502		1	C: fxd polycarb, 0.33uf, 100vdcw, 10%	84411	HEW-82
	C3	0180-1746		1	C: fxd tant, 15uf, 20vdcw, 10%	90201	TAS156K020PIC
	C4	0160-2189		1	C: fxd mylar, 0.012uf, 200vdcw, 5%	56289	192P12352-PTS
	CR1	1901-0040		2	Diode: Si	01295	PG512
	CR2 thru CR4	1901-0025		3	Diode: Si, 100mA, 500nA, 150V, 12pf	01295	UG 1464-2
	CR5	1901-0040			Diode: Si	01295	PG512
	L1	9140-0210		1	Coil: Molded Choke, 100UH, 5%	82142	15-1315-12J

† Numbers in this column identify parts shown in Figure 29.

†	REFERENCE DESIGNATOR	-hp- PART NO.		TQ	DESCRIPTION	MFR.	MFR. PART NO.
	Q1	5080-4663		3	TSTR: PNP, Si	04713	SS5651
	Q2	5080-4670		2	TSTR: NPN, Si, 2N3904	04713	SPS3611
	Q3	5080-4658		1	TSTR: PNP, Si, 2N3638	04713	SPS3320
	Q4	5080-4660		1	TSTR: PNP, Si, 2N3906	04713	SPS3612
	Q5, Q6	1854-0234		4	TSTR: NPN, Si, 2N3440	86684	obd
	Q7	5080-9030		2	TSTR: NPN, Si	04713	SS9333
	Q8, Q9	5080-4663			TSTR: PNP, Si	04713	SS5651
	Q10	5080-9030			TSTR: NPN, Si	04713	SS9333
	Q11	5080-4670			TSTR: NPN, Si, 2N3904	04713	SPS3611
	Q12,Q13	1854-0234			TSTR: NPN, Si, 2N3440	86684	obd
	R1	0757-0198		1	R: fxd met flm, 100 ohms, 1/2W, 1%	91637	MFF-1/2-10, T-1
	R2	0698-3404		1	R: fxd met flm, 383 ohms, 1/2W, 1%	91637	MFF-1/2-10, T-1
	R3	0683-1025		1	R: fxd comp, 1 kilohm, 1/4W, 5%	01121	CB1025
	R4	0757-0281		1	R: fxd flm, 2740 ohms, 1/8W, 1%	00LNM	CEA T-O
	R5	0757-0280		2	R: fxd flm, 1 kilohm, 1/8W, 1%	14674	C4 T-O
	R6	0698-4396		1	R: fxd flm, 80.6 ohms, 1/8W, 1%	14674	C4 T-O
	R7	0698-4438		1	R: fxd flm, 3090 ohms, 1/8W, 1%	00LNM	CEA T-O
	R8	0686-3945		1	R: fxd comp, 390 kilohms, 1/2W, 5%	01121	EB3945
	R9	0698-0084		1	R: fxd flm, 2150 ohms, 1/8W, 1%	14674	C4 T-O
	R10	0764-0031		2	R: fxd met oxide, 47 kilohms, 2W, 5%	14674	C-42S
	R11, R12	0686-2245		2	R: fxd comp, 220 kilohms, 1/2W, 5%	01121	EB2245
	R13	0764-0031			R: fxd met oxide, 47 kilohms, 2W, 5%	14674	C-42S
	R14	0757-0417		1	R: fxd flm, 562 ohms, 1/8W, 1%	14674	C4 T-O
	R15	0757-0416		1	R: fxd flm, 511 ohms, 1/8W, 1%	14674	C4 T-O
	R16	0757-0283		1	R: fxd flm, 2 kilohms, 1/8W, 1%	14674	C4 T-O
	R17	0698-0083		1	R: fxd flm, 1960 ohms, 1/8W, 1%	14674	C4 T-O
	R18	0757-0443		1	R: fxd flm, 11 kilohms, 1/8W, 1%	14674	C4 T-O
	R19	0757-0273		1	R: fxd flm, 3010 ohms, 1/8W, 1%	91637	MMF-1/10-32, T-1
	R20	0757-0280			R: fxd flm, 1 kilohm, 1/8W, 1%	14674	C4 T-O
	R21 thru R23	2100-2534		1	R: Set, Var. comp, 125K/7K/2K, 20%	71590	Series 70-3
3	A20	09100-69509		1	Power Supply Ass'y	-hp-	
	C1	0180-2149		1	C: fxd al elect, 100uf, 300vdcw, +50 −10%	56289	39D107F300MP4-DSB
	C2	0180-0134		1	C: fxd al elect, 7000uf, 25vdcw, −10 +100%	56289	D35642-DQB (Type 36D)
	CR1, CR2	1901-0522		2	Diode: Si, 100V PIV, 3A	14099	3SM2
	F1	2110-0312		1	Fuse: 1A, 250V, slo-blo	71400	MDL-1
	F2	2110-0003		1	Fuse: 3A, 250V, normal-blo	71400	AGC-3
	F3	2110-0012		1	Fuse: .5A, 250V, normal-blo	71400	AGC-1/2
	Q1	1854-0063		1	TSTR: NPN, Si, 2N3055 (also listed below; see † 7)	04713	obd
	R1	0683-2025		1	R: fxd comp, 2 kilohms, 1/4W, 5%	01121	CB2025
	R2	0684-6821		1	R: fxd comp, 6800 ohms, 1/4W, 10%	01121	CB6821
	T1	9100-1418		1	XFMR: Power, 117V, 60Hz	-hp-	
		0180-0078		1	Clamp: Cap Mtg, 2-1/16D, w/mtg feet, 3/4" strap, Stl, Cad-P	56289	4586-2B-222
		1200-0010		3	Socket tube: 2 cont, pencil tube, .28D, .34 lg	81073	22-3
		1200-0041		1	TSTR Socket: .136D mtg hole	71785	133-32-10-013
		1200-0043		1	Insulator: TSTR mtg, anodized Al, 1.780 x 1.114 x .021	13103	1059B
		1251-0135		1	Connector: PC, 15 pin, style A, type 2	95354	91-6915-1500-00

† Numbers in this column identify parts shown in Figure 29.

†	REFERENCE DESIGNATOR	-hp- PART NO.		TQ	DESCRIPTION	MFR.	MFR. PART NO.
		1400-0041		2	Clamp: Cap, Stl, Cad-P, 1.063 x .594 x 1.047 hi	70472	obd
		1400-0084		3	Fuse Holder: Extr Post Type, blk, 250V, 15A Capacity,2-5/64 lg, .690D	75917	342014
		5040-0170		2	PC Board Support	-hp-	
		09100-00101		1	Deck Power Supply	-hp-	
		09100-01101		1	Heat Sink: TSTR	-hp-	
		09100-61601		1	Cable Ass'y: Power Supply, connects V1, A15, A16, etc.	-hp-	
		09100-61603		1	Cable: Power Receptacle, to bottom case	-hp-	
		09100-61610		1	Power Cable: Power Supply, to keyboard	-hp-	
	A20A2	09100-66522		1	Board Ass'y: High Voltage Power Supply	-hp-	
	C1	0160-2290		1	C: fxd mylar, 0.15uf, 80 vdcw, 10%	56289	192D1549R8-PTS
	C2, C3	0160-3052		3	C: fxd cer, 4700pf, 6K vdcw, 20%, .875D, .312 thk	56289	41C 255-CDH
	C4	0160-3053		2	C: fxd cer, 2700pf, 6K vdcw, 20%, .875D, .312 thk	56289	41C251CDH
	C5	0160-0168		1	C: fxd mylar, 0.1uf, 200 vdcw, 10%	56289	192P10492-PTS
	C6	0160-3053			C: fxd cer, 2700pf, 6K vdcw, 20%, .875D, .312 thk	56289	41C251CDH
	C7	0160-2144		1	C: fxd cer, 3300pf, 1K vdcw, +80 −20%	91418	Type B
	C8	0160-3052			C: fxd cer, 4700pf, 6K vdcw, 20%, .875D, .312 thk	56289	41C 255-CDH
	CR1	1901-0566		1	Diode: Hi Voltage, 5 HF 10	14099	SCMS10K
	CR2, CR3	1901-0033		2	Diode: Si, 180wv, 13pf, 100mA, 25nA	93332	D6238
	CR4	1902-3393		1	Diode: Si, 75V, 400mw, 5%	04713	SZ 10939-434
	Q1	1854-0322		1	TSTR: NPN, Si	86658	obd
	R1	2100-2099		1	R: var comp, 20 kilohms, 1/8W, 30%	71450	UPE 200RE
	R2	0684-1531		1	R: fxd comp, 15 kilohms, 1/4W, 10%	01121	CB1531
	R3	0684-6831		1	R: fxd comp, 68 kilohms, 1/4W, 10%	01121	CB6831
	R4	0698-5097		1	R: fxd carb comp, 1.5 megohms, 1/4W, 10%	01121	CB1551
	R5	0698-5098		1	R: fxd carb comp, 2.7 megohms, 1/4W, 10%	01121	CB2751
	R6, R7	0687-1031		2	R: fxd comp, 10 kilohms, 1/2W, 10%	01121	EB1031
	R8	0690-5651		1	R: fxd carb comp, 5.6 megohms, 1W, 10%	01121	GB5651
	R9	2100-2556		1	R: var comp, 3.5 megohms, 1/10W, 10%	71450	UPE 200RE
	R10	0698-6380		1	R: fxd carb flm, 29 megohms, 1W, 5%	03888	HV2000N5
	R11	0684-1021		1	R: fxd comp, 1 kilohms, 1/4W, 10%	01121	CB1021
	T1	9100-1415		1	XFMR: Coil, High Voltage	-hp-	
		0340-0060		6	Insulator: feed-thru for 19 awg wire, .185 shank, press fit type, brs, gld flash plated, teflon	98291	FT-E-15
		0380-0160		4	Standoff: .500 EFF lgth, 6-32, brs	14480	obd
		1205-0048		1	Heat Sink: TO-8, case finned, press fit, .440 to .544 in. D, 32C/watt case	00LNT	NF-213
		09100-44701		5	Support: Capacitor	-hp-	
					A20 MISCELLANEOUS PARTS		
4	XA15, 16	1251-0135		2	Connector: Printed Circuit, 15 cont	95354	91-6915-1500-00
5		0624-0062		2	Screw-Tapping: Stl, 6-20 x .625, PH, Phil, Cad-P	00LND	obd
6		2190-0007		1	Washer-Lock: Internal No. 6, .141 ID, .288 OD	20859	obd
7	A20Q1	1854-0063			TSTR: NPN, Si, 2N3055 (listed earlier under A20 electronic parts)	04713	obd
8		1200-0043		1	Insulator: TSTR Mtg, 1.780 x 1.114 x .021	13103	10598
9		2200-0143		2	Screw-Mach: SS, 4-40 x .375, PH, pozi	00LOC	obd

† Numbers in this column identify parts shown in Figure 29.

†	REFERENCE DESIGNATOR	-hp- PART NO.		TQ	DESCRIPTION	MFR.	MFR. PART NO.
10		2190-0913		2	Washer-Lock: Hel, Spg, No. 4, SS, Pass, light, .115 ID, .202 OD, .035 wd, .020 thk	70318	obd
11		09100-01101		1	Heat Sink: Reg TSTR	-hp-	
12		1400-0025		2	Clamp: Cable, .5D cable, nyl., .203 OC, wht	95987	WC-86
13		0624-0250		2	Screw-Tapping: 8-32 x 2.250 lg, Hex Hd, Hex Dr, Stl, Cad-P, Taptite	72228	obd
14		1200-0041		1	Socket: TSTR	71785	133-32-10-013
15		0360-1258		1	Term Socket Lug: .656 lg, .312 wd, Plain, 90o, Br 1/8	79963	403
16		2190-0005		1	Washer-Lock: Ext No. 4, .285OD, .116ID,k .015 thk, phz brz, NI-P	80120	obd
17		3050-0105		1	Washer: Brass, NI-P, .2812 OD, .125 ID, 1/32 thk	00LOC	obd
18		2190-0913		1	Washer-Lock: Hel, Spg, No. 4, Hdw, SS, Pass, .115 ID, 0.202 OD, 0.035 wd, 0.020 thk	70318	obd
19		2260-0001		2	Nut-Hex: SS, 4-40 x .25 wd, 3/32 thk	80120	obd
20		09100-47603		2	Boot-Conn: molded polycarbonate	-hp-	
21		1251-0333		1	Connector-PC: 20 rib cont	71785	251-10-30-261
22		1200-0037		1	Socket: CRT Tube	72825	9709-4
23		4040-0740		1	Cover: Plate	-hp-	
24		0628-0003		2	Screw-Tapping: 8-18 x .625, PH, Slot Dr, SS	00LOC	obd
25	A21	09100-66521		1	Board Ass'y: Low Voltage Power Supply	-hp-	
	C1	0160-0166		1	C: fxd mylar, 0.068uf, 200vdcw, 10%	56289	192P68392-PTS
	C2	0180-1997		1	C: fxd al elect, 20uf, 150vdcw, +50 −10%	56289	30D206F150DH1-DSM
	C3	0180-0050		1	C: fxd al elect, 40uf, 50 vdcw, +75 −10%	56289	30D406G050DD2-DSM
	C4	0180-0097		1	C: fxd tant, 47uf, 35vdcw, 10%	56289	150D476X9035S2-DYS
	C5	0180-0161		1	C: fxd tant, 3.3uf, 35vdcw, 20%	56289	150D335X0035B2-DYS
	CR1	1901-0030		1	Diode: Si, 800 PIV, .60A, .36 x .15 bdy, gra stripe	04713	SR1358-11
	CR2	1901-0158		1	Diode: Si, 200 PIV, .75A, .205 x .107 bdy, red stripe	04713	SR1358-3
	CR3	1902-0049		1	Diode: bkdn, 6.19V, 400mw, 5%	04713	SZ 10939-122
	CR4, CR5	1902-3301		2	Diode: bkdn, 34.8V, 400mw, 5%	04713	SZ 10939-338
	CR6	1901-0096		1	Diode: Si, 120V, 3pf, 100ns	01295	UG-888-1
	CR7 thru CR9	1901-0040		3	Diode: Si	01295	PG512
	Q1	5080-4670		1	TSTR: NPN, Si, 2N3904	04713	SPS 3611
	Q2	5080-9030		2	TSTR: NPN, Si	04713	SS 9333
	Q3	1854-0062		1	TSTR: NPN, Si, 2N1701	07256	obd
	Q4	5080-9030			TSTR: NPN, Si	04713	SS 9333
	Q5, Q6	5080-4660		2	TSTR: PNP, Si, 2N3906	04713	SPS 3612
	R1,R13,R19	2100-2532		1	R: Set, var comp, 250K/150K/2K, 20%	71590	Series 70-3
	R2	0684-1531		1	R: fxd comp, 15 kilohms, 1/4W, 10%	01121	CB1531
	R3	0684-4711		1	R: fxd comp, 470 ohms, 1/4W, 10%	01121	CB4711
	R4	0684-1021		1	R: fxd comp, 1 kilohm, 1/4W, 10%	01121	CB1021
	R5	0698-3412		1	R: fxd met flm, 3830 ohms, 1/2W, 1%	91637	MFF-1/2-10, T-1
	R6	0758-0033		1	R: fxd flm, 2 kilohms, 1/4W, 5%	14674	C5 T-O
	R7	0683-6835		3	R: fxd comp, 68 kilohms, 1/4W, 5%	01121	CB6835
	R8	0686-1035		1	R: fxd comp, 10 kilohms, 1/2W, 5%	01121	EB1035
	R9	0683-6835			R: fxd comp, 68 kilohms, 1/4W, 5%	01121	CB6835
	R10	0757-0428		1	R: fxd comp, 1620 ohms, 1/8W, 1%	14674	C4 T-O
	R11	0757-0317		1	R: fxd flm, 1330 ohms, 1/8W, 1%	14674	C4 T-O
	R12	0757-0439		1	R: fxd flm, 6810 ohms, 1/8W, 1%	91637	IMF-1/10-32, T-1
	R14	0698-3447		1	R: fxd flm, 422 ohms 1/8W, 1%	91637	CMF-1/10-32, T-1
	R15	0683-5125		1	R: fxd comp, 5100 ohms, 1/4W, 5%	01121	CB5125
	R16	0683-6835			R: fxd comp, 68 kilohms, 1/4W, 5%	01121	CB6835
	R17	0683-1645		1	R: fxd comp, 160 kilohms, 1/4W, 5%	01121	CB1645
	R18	0684-4741		1	R: fxd comp, 470 kilohms, 1/4W, 10%	01121	CB4741
	R20	0683-1325		1	R: fxd comp, 1300 ohms, 1/4W, 5%	01121	CB1325
	R21	0683-1615		1	R: fxd comp, 160 ohms, 1/4W, 5%	01121	CB1615
	R22	0683-1035		1	R: fxd comp, 10 kilohms, 1/4W, 5%	01121	CB1035

† Numbers in this column identify parts shown in Figure 29.

†	REFERENCE DESIGNATOR	hp PART NO.		TQ	DESCRIPTION	MFR.	MFR. PART NO.
					MISCELLANEOUS PARTS		
26		0624-0248		2	Screw-Tapping: 8-32 x .750 lg, Hex Hd, Hex Dr, Stl, Cad-P, Taptite	72228	obd
27		3050-0378		2	Washer-Fibre: .200 ID, .4375 OD, .062 thk, flat	73734	33-113
28		2420-0002		3	Nut-Hex: 6-32 thrd, .312 AF, .109 thk, SS	73076	obd
29		2190-0918		3	Washer-Lock: Hel, spg, No. 6, SS, Heavy, Pass, .141 ID, .2169 OD, .040 thk	20859	obd
30		3050-0066		3	Washer-Flat: Brs, NI-P, .375 OD, .147 ID,k .031 thk	80120	obd
31		09100-44706		1	Mount: Rear CRT	-hp-	
32		1220-0089		1	Shield: CRT, 2.37 ID, .02 wall, 4.25 lg	00LNK	obd
33	V1	5083-1551		1	CRT	-hp-	
34		09100-01202		1	Clamp: CRT	-hp-	
35		0624-0249		3	Screw-Tapping, 8-32 x 2.50 lg, PH, pozi, Stl, Pass Taptite	72228	obd
36		2190-0017		5	Washer-Lock: Hel, phz brz, No. 8, Heavy, NI-P .168 ID, .310 OD, .047 thk, .062 wd	73734	obd
37		3050-0026		3	Washer: brs, .4375 OD, .125 ID, .030 thk	78471	obd
38		3050-0221		3	Washer-Fibre: shoulder, .172 ID, 3/8 OD, .095 thk	73734	1462
39		0624-0246		11	Screw-Tapping: 6-32 x .500 lg, Hex Hd, Hex, Dr, Stl, Cad-P, Taptite	72228	obd
40		0624-0244		4	Screw-Tapping: 6-32 x .250 lg, Hex Hd, Hex Dr, Stl, Cad-P, Taptite	72228	obd
41		1390-0025		4	Retainer-Latch: .305 ID, .520 OD, .013 thk, Stl, Cad-P	71286	15511-1AC
42		09100-60401		1	Error Light Ass'y	-hp-	
		09100-40401		1	Error Light Box	-hp-	
		7120-1305		1	Decal: Error Light	00LNG	obd
		2140-0301		1	Bulb: bi-pin base, T 1-3/4 bulb, 14V, .08A	71744	7382
43		09100-60403		1	CRT Bracket Ass'y	-hp-	
44		09100-27401		1	Button: Mag Card Record	-hp-	
45		09100-27402		1	Button: Mag Card Enter	-hp-	
46		2190-0007		2	Washer-Lock: Internal, No. 6, 0.141 ID, .288 OD, 0.018 thk, phz brz, NI-P	20859	1906-00
47		2420-0003		2	Nut-Hex: SS, 6-32 x .250 AF, .093 thk, SS, Pass	80120	obd
48		0624-0208		10	Screw-Tapping: 6-32 x .500 lg, Taptite, Stl, Cad-P	72228	obd
49		0510-0729		2	Retainer: Push-on, phz brz, .198 ID, .322 OD	02768	8063-20-01-2414
50		3050-0099		1	Washer: Brs, NI-P, .50D, .25 ID, .040 thk	73734	obd
51		0624-0045		1	Screw-Tapping: Stl, Cad-P, 6-20 x 3/8, PH,	73734	43112
52		1400-0017		1	Clamp: Cable, 5/16 D Cable, 5/32 OC, red	95987	WC-54NA
53		09100-01205		1	PC Board Retainer	-hp-	
54		0624-0214		2	Screw-Tapping: 6-32 x .750 lg, FH, pozi, Stl, Cad-P, Taptite	72228	obd
55		09100-01210		1	Plate: Latch	-hp-	
56		0590-0050		2	Nut-Lock: 10-32, UNF-3B, .172 HT, .365, nyl lkg, Brs	72962	ESNA97NTM02
57		3050-0003		5	Washer-Flat: Fibre, .375 OD, .1406 ID, 3/64 thk	73734	1471
58		09100-47901		2	Screw: Printer	-hp-	
59		09100-22002		1	Case: Top	-hp-	
60		9220-1504		1	Cover: Instruction Card	000LB	obd
61		2510-0107		2	Screw-Mach: SS, 8-32 x .500, PH, pozi	00LOC	obd
62		09100-22005		1	Case: Bottom	-hp-	
63		09100-01203		1	UP-Latch: Cover	-hp-	
64		0624-0078		3	Screw-Tapping: 6-32 x .375 lg, PH, pozi, Stl, Cad-P, Taptite	72228	obd
65		1251-2358		1	Conn-AC: Power recpt. 3F cont, gra, solder term, 6A, 250V	00LNU	5098-3
66		9100-3137		1	Filter-Line: 100/115/230V, 46 to 66 Hz	05245	F-1376
67		3101-1234		1	Switch-Slide: 115/230V, DPDT, Non-Short, Solder lug	82389	11A-1242A

† Numbers in this column identify parts shown in Figure 29.

†	REFERENCE DESIGNATOR	-hp- PART NO.		TQ	DESCRIPTION	MFR.	MFR. PART NO.
68		1251-2357		1	Conn-AC-Power: CEE, Flg receptacle, 3M cont, 6A, 250V, blk, solder term	82389	EAC-301
69		4040-0729		1	Bezel-Rear: 9100A/B	-hp-	
70		2390-0008		1	Screw-Mach: 6-32 x .375 lg, PH, slot DR, SS	00120	obd
71		09100-05101		1	Hinge: Case	-hp-	
72		1400-0754		1	Clamp-Cable: nyl, .375D cable, .375w cable, .188 OC, .17 mtg hole	09133	obd
73		09100-61611		1	Cable Ass'y: Interconnect	-hp-	
					MISCELLANEOUS COMMON PARTS		
		8120-1378		1	Cable Ass'y: Power Cord, 7.5 ft, jade gra, 3 cont F	70903	KH-4147
		4040-0744		1	Case-Shipping: molded polysty foam	00LOE	690407
		9211-1359		1	Carton-Corrugated: 25-5/8 lg x 23-1/2 wd x 15 dp, 350lb. wht	18473	obd
		9220-1558		1	Pad-Corrugated	18473	obd
		09100-90006		1	Insert for Mag. Card Reader (Pullout)	-hp-	

† Numbers in this column identify parts shown in Figure 29.

†	REFERENCE DESIGNATOR	-hp- PART NO.		TQ	DESCRIPTION	MFR.	MFR. PART NO.
					UNIQUE 9100A PARTS		
1		9320-1157		1	Instr. Card (Std. Only): English	14860	obd
		9320-1170		1	Instr. Card: Opt. 001, French	14860	obd
		9320-1171		1	Instr. Card: Opt. 002, German	14860	obd
		9320-1172		1	Instr. Card: Opt. 003, Italian	14860	obd
		9320-1179		1	Instr. Card: Opt. 004, Spanish	14860	obd
2	A30	09100-69508		1	Keyboard Ass'y	-hp-	
3		3050-0003		4	Washer-Flat: Fiber, .375OD, .1406 ID, 3/64 thk	73734	1471
4		0624-0246		9	Screw-Tapping: 6-32, .500 lg, Hex Hd, Hex Dr, Stl, Cad-P, Taptite	72228	obd
5		0624-0078		4	Screw-Tapping: 6-32, .375 lg, PH, Pozi, Stl, Cad-P, Taptite	72228	obd
6	A5	09100-69505		1	Bottom Ass'y	-hp-	
7		2190-0918		4	Washer-Lock: Hel, Spg, No. 6, SS, Heavy, .269 OD, .040 thk, .141 ID, Pass	20859	obd
8		2360-0197		4	Screw-Mach: 6-32, .375 lg, PH, Pozi, SS	00LOC	obd
9	A40	09100-69511		1	Mag. Card Reader Ass'y	-hp-	
10	A1	09100-69501		1	Board Ass'y: Control Logic	-hp-	
11	A3	09100-69503		1	Board Ass'y: Core	-hp-	
12		7120-1306		1	Name Plate	00LNO	obd
13		4040-0402		1	Bezel-CRT	00LNS	obd
14		09100-60402		1	Register-I.D. Ass'y	-hp-	
15	A4	09100-69504		1	Board Ass'y: Core Sense Amplifier	-hp-	
16	A2	09100-69502		2	Board Ass'y: Flip Flop	-hp-	
					9100A MISCELLANEOUS MATERIAL KITS		
		09100-87901		1	Miscellaneous Material Kit	-hp-	
		8120-1378		1	Cable Ass'y: Power Cord, 7.5 ft, Jade gra, 3 cont	70903	KH-7081
		4040-0350		1	Dust Cover	00LNW	obd
		9211-1360		1	Carton-Corrugated	18473	obd
		5060-5919		1	Calculator Program Card Ass'y	-hp-	
		09100-90001		2	Manual: Operating and Programming	-hp-	
		09100-90002		1	Program Library: 9100A	-hp-	
		09100-90023		1	Program Pad: 9100A	-hp-	
		09100-90004		1	Program Card: Diagnostic	-hp-	
	F1	2110-0312		2	Fuse: 1A, 250V, slo-blo	71400	MDL-1
	F2	2110-0003		2	Fuse: 3A, 250V, normal-blo	71400	AGC-3
	F3	2110-0012		2	Fuse: 0.5A, 250V, normal-blo	71400	AGC-1/2
		09100-69512		1	Miscellaneous Material Kit Same as the 09100-87901 except that 8120-1378 and 09100-90023 have been deleted and replaced with 8120-0078 and 09100-90003 respectively.	-hp-	

† Numbers in this column identify parts shown in Figure 30.

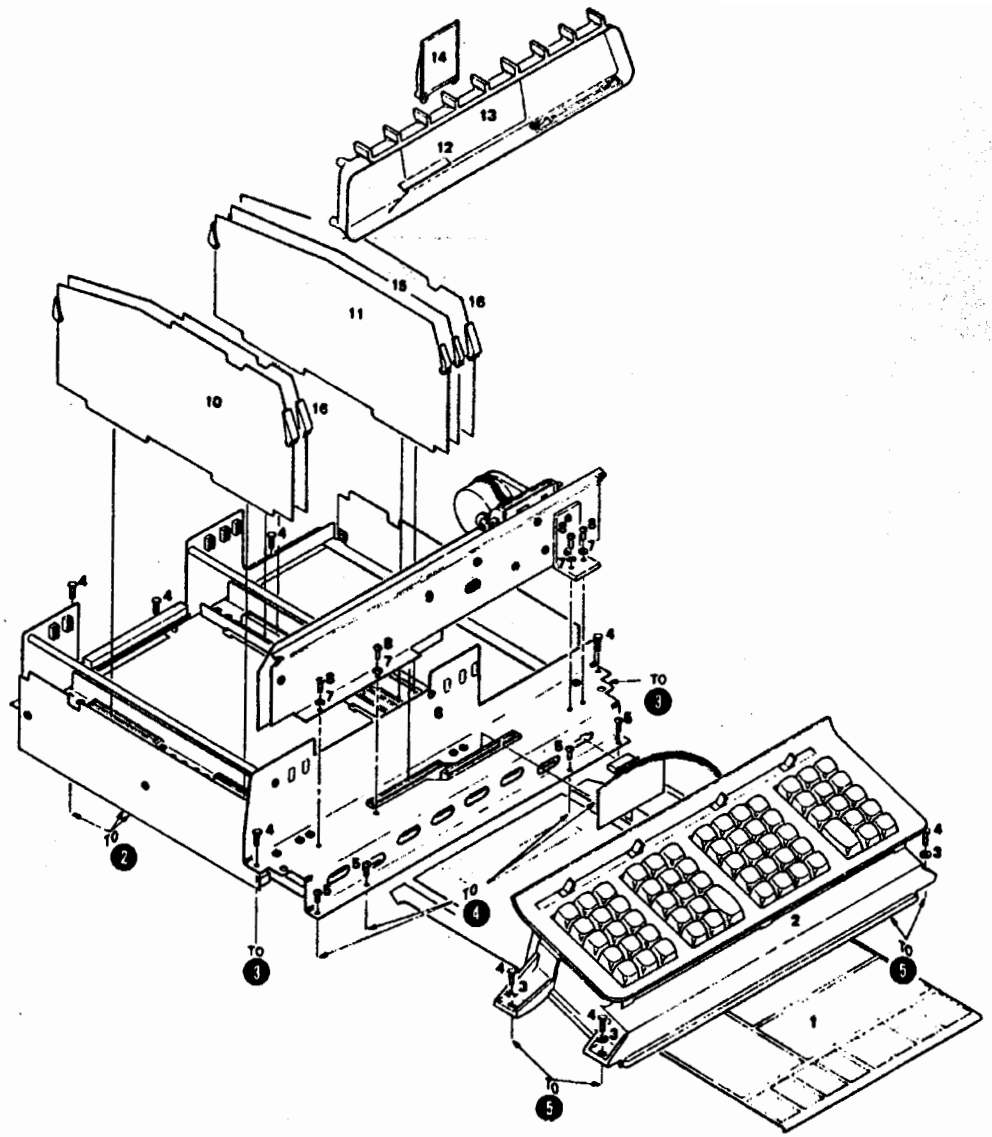

9100A

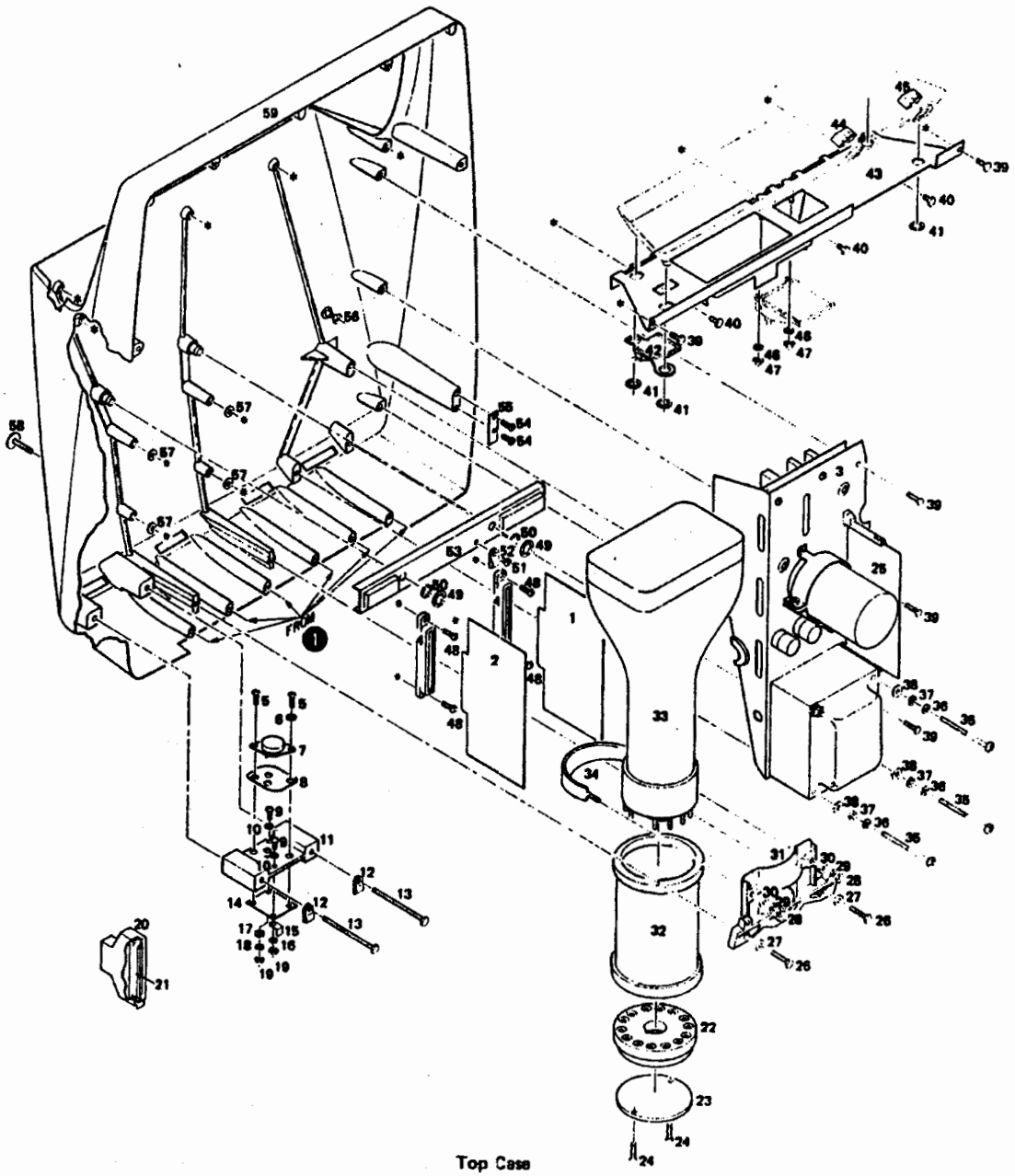

Top Case

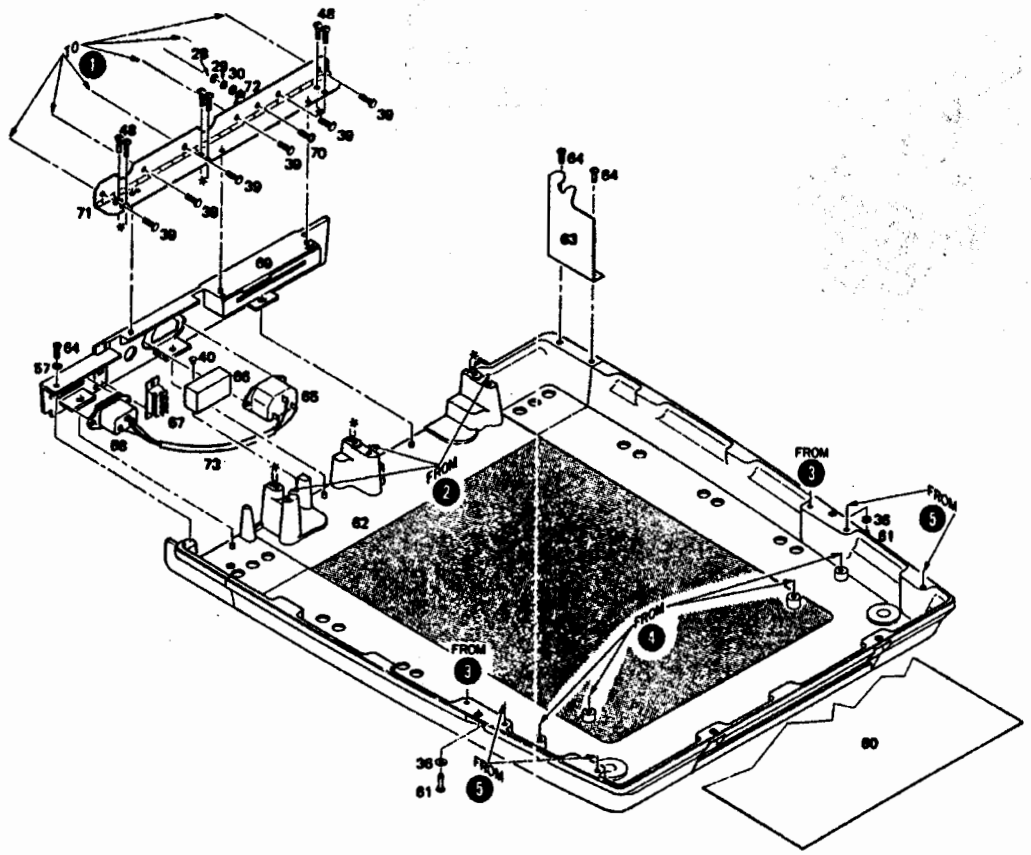

Bottom Case

Figure 29. 9100A/B Common Parts

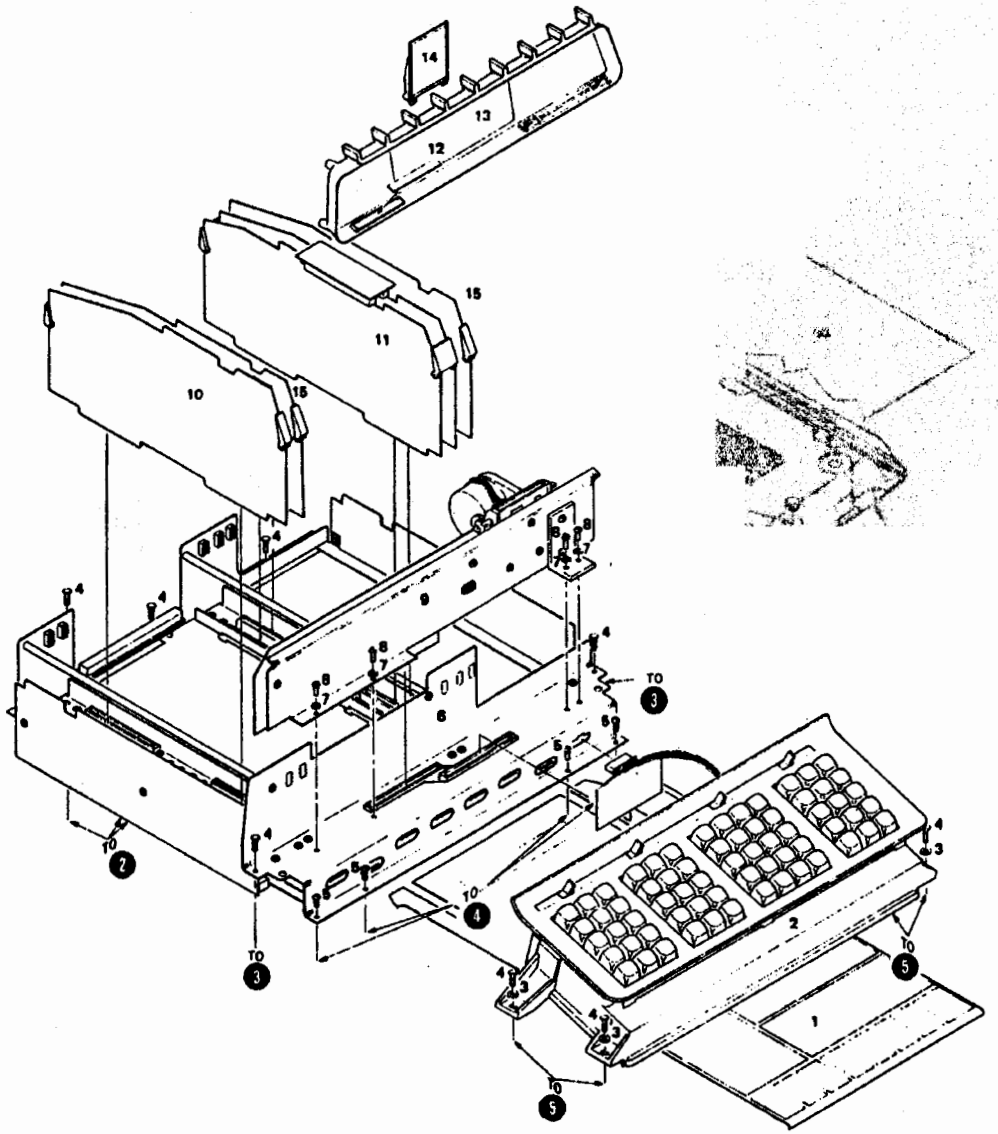

9100B

Figure 30. Unique 9100A and 9100B Parts

†	REFERENCE DESIGNATOR	-hp- PART NO.		TQ	DESCRIPTION	MFR.	MFR. PART NO.
					UNIQUE 9100B PARTS		
1		9320-1183		1	Instr. Card (Std. Only): English	14860	obd
		9320-1184		1	Instr. Card: Opt. 001, French	14860	obd
		9320-1185		1	Instr. Card: Opt. 002, German	14860	obd
		9320-1186		1	Instr. Card: Opt. 003, Italian	14860	obd
		9320-1187		1	Instr. Card: Opt. 004, Spanish	14860	obd
2	A30	09100-69921		1	Keyboard Ass'y	-hp-	
3		3050-0003		4	Washer-Flat: Fiber, .375 OD, .1406 ID, 3/64 thk	73734	1471
4		0624-0246		9	Screw-Tapping: 6-32, .500 lg, Hex Hd, Hex Dr, Stl, Cad-P, Taptite	72228	obd
5		0624-0078		4	Screw-Tapping: 6-32, .375 lg, PH, Pozi, Stl, Cad-P, Taptite	72228	obd
6	A5	09100-96555		1	Bottom Ass'y	-hp-	
7		2190-0918		4	Washer-Lock: Hel, Spg, No. 6, SS, Heavy, Pass, .141 ID, .269 OD, .040 thk	20859	obd
8		2360-0197		8	Screw-Mach: SS, 6-32, .375, PH, Pozi	00LOC	obd
9	A40	09100-69923		1	Mag. Card Reader Ass'y	-hp-	
10	A1	09100-69551		1	Board Ass'y: Control Logic	-hp-	
11	A3/A4	09100-69595		1	Core Driver Ass'y/ Core Sense Amplifier Ass'y	-hp-	
12		7120-1350		1	Name Plate	22670	obd
13		09100-60301		1	Bezel-CRT Ass'y: Nameplate	-hp-	
14		09100-60422		1	Register-I.D. Ass'y	-hp-	
15	A2	09100-69502		2	Board Ass'y: Flip Flop	-hp-	
					9100B MISCELLANEOUS MATERIAL KITS		
		09100-87921		1	Miscellaneous Material Kit	-hp-	
		4040-0350		1	Dust Cover	00LNW	obd
		5060-5919		1	Calculator Program Card Ass'y	-hp-	
		8120-1378		1	Cable Ass'y: Power Cord, 7.5 ft, Jade Gra, 3 cont	70903	KH-7081
		9211-1360		1	Carton-Corrugated	18473	obd
		09100-90021		2	Manual: Operating and Programming	-hp-	
		09100-90022		1	Program Library: 9100B	-hp-	
		09100-90023		1	Program Pad: 9100B	-hp-	
		09100-90024		1	Program Card: Diagnostic	-hp-	
	F1	2110-0312		2	Fuse: 1A, 250V, slo-blo	71400	MDL-1
	F2	2110-0003		2	Fuse: 3A, 250V, normal-blo	71400	AGC-3
	F3	2110-0012		2	Fuse: 0.5A, 250V, normal-blo	71400	AGC-1/2
		09100-69562		1	Miscellaneous Material Kit Same as the 09100-87921 except that 8120-1378 is replaced by 8120-0078.	-hp-	

† Numbers in this column identify parts shown in Figure 30.

REFERENCE DESIGNATOR	-hp- PART NO.		TQ	DESCRIPTION	MFR.	MFR. PART NO.
	11130A			9100A SERVICE KIT	-hp-	
	9220-1545		1	Pad-Foam: 12-1/4 lg, 9 wd, 2 dp, Wht, Exp polysty	19706	obd
	9220-1543		1	Pad-Corrugated	18473	obd
	9220-1135		5	Pad-Foam: 6.625 x 4.875 x .625 thk, char gra	000LB	obd
	9220-1134		4	Pad-Foam: 12 x 7.375 x 1, char gra, polye, top	000LB	obd
	9220-1133		1	Pad-Foam: 16.125 x 7.375 x 1, char gra, polye, top	000LB	obd
	9220-1128		4	Pad-Foam: for logic and flip flop boards, char gra, polye	000LB	obd
	9220-1127		1	Pad-Foam: for Card Reader, bottom, char gra, polye	000LB	obd
	9220-1126		2	Pad-Foam: Die cut and Laminated, char gra, polye	000LB	obd
	9220-1125		3	Pad-Foam: Vertical and Horizontal Amplifiers Pad, Bottom, char gra	000LB	obd
	9220-1123		1	Pad-Foam: Keyboard Pack, char gra, polye	000LB	obd
	9220-1122		1	Pad-Foam: Keyboard Pack, char gra, polye	000LB	obd
	9211-0926		4	Carton-Selflock: 7 x 5-1/8 x 2-1/4 hi, wht	27463	obd
	9211-0925		1	Carton-Corrugated: RSC, 16-1/8 x 14-1/2 x 6-7/8, wht	18473	obd
	9211-0923		5	Carton-Selflock: 12.25 x 7.625 x 2.25 dp, wht	27463	obd
	9211-0922		3	Carton-Corrugated: selflock, 16-1/2 x 7-5/8 x 5-1/8 hi, S/W, Wht	27463	obd
	9211-0921		1	Carrying Case: fiberglass, 25 x 19 x 16.75	000LL	MOD CR-340
	8500-0810		1	Cleaner: Mag Hd, 4 oz. bottle	000LA	obd
V1	5083-1551		1	CRT: Calculator	-hp-	
	5000-7196		4	Plate: Castor Support	-hp-	
	1490-0895		4	Caster: Swivel, soft rubber tread, Cad-P, 3.0 D wheel, 1-1/4 wd	000LM	3-9-101
A15	09100-66515		1	PC Ass'y: Horizontal Deflection Amplifier	-hp-	
A16	09100-66516		1	PC Ass'y: Vertical Deflection Amplifier	-hp-	
A21	09100-66521		1	PC Ass'y: Low Voltage Power Supply	-hp-	
A1	09100-69501		1	PC Ass'y: Control Logic	-hp-	
A2	09100-69502		1	PC Ass'y: Flip Flop	-hp-	
A3	09100-69503		1	PC Ass'y: Core	-hp-	
A4	09100-69504		1	PC Ass'y: Sense Amplifier	-hp-	
A5	09100-69505		1	PC Ass'y: Bottom	-hp-	
A30	09100-69508		1	Keyboard Ass'y	-hp-	
A20A2	09100-69522		1	PC Ass'y: Power Supply	-hp-	
A40	09100-69511		1	Magnetic Card Reader Ass'y	-hp-	
	09100-68701		1	Tool Kit: w/tools (expanded below)	-hp-	
	09100-68702		1	Plastic Box: w/parts (expanded below)	-hp-	
	09100-90004		1	Program Card: Diagnostic	-hp-	
	09100-90030		2	Manual: Service	-hp-	
	09120-88702		1	Paint: Touch Up	-hp-	
	11130B			9100B SERVICE KIT	-hp-	
	9310-0061		1	Cloth-Cleaning: 27 x 27, heavyweight, wht	00LNN	birdseye
	9220-1545		1	Pad-Foam: 12.25 lg, 9 wd, 2 dp, wht, Exp polysty	19706	obd
	9220-1543		1	Pad-Corrugated	18473	obd
	9220-1135		5	Pad-Foam: 6.625 x 4.875 x .625 thk, char gra	000LB	obd
	9220-1134		4	Pad-Foam: 12 x 7.375 x 1, char gra, polye, top	000LB	obd

	REFERENCE DESIGNATOR	-hp- PART NO.		TQ	DESCRIPTION	MFR.	MFR. PART NO.
		9220-1133		1	Pad-Foam: 16.125 x 7.375 x 1, char gra, polye, top	000LB	obd
		9220-1128		4	Pad-Foam: for logic & FlipFlop boards, char gra, polye	000LB	obd
		9220-1127		1	Pad-Foam: for Card Reader, btm, char gra, polye	000LB	obd
		9220-1126		2	Pad-Foam: die cut & laminated, char gra, polye	000LB	obd
		9220-1125		3	Pad-Foam: vert & horiz amp, btm pad, char gra	000LB	obd
		9220-1123		1	Pad-Foam: keyboard pack, char gra, polye	000LB	obd
		9220-1122		1	Pad-Foam: keyboard pack, char gra, polye	000LB	obd
		9211-0926		4	Carton-Selflock: 7 x 5.125 x 14.5 x 6.875, wht	27463	obd
		9211-0925		1	Carton-Corrugated: RSC, 16.125 x 14.5 xt 6.875, wht	18473	obd
		9211-0923		5	Carton-Selflock: 12.25 x 7.625 x 2.25 dp, wht	27463	obd
		9211-0922		3	Carton-Corrugated: selflock, 16.5 x 7.625 x 5.125 hi, S/W, wht	27463	obd
		9211-0921		1	Carrying Case: fiberglass: 25 x 19 x 16.75	000LL	MOD CR-340
		8500-0810		1	Cleaner: Mag Hd, 4 oz. bottle	000LA	obd
	V1	5083-1551		1	CRT: Calculator	-hp-	
		5000-7196		4	Plate: Caster Support	-hp-	
		1490-0895		4	Caster-Swivel: soft rubber tread, Cad-P, 1.25 wd, 3.0 D wheel	000LM	3-9-101
	A40	09100-69923		1	Magnetic Card Reader Ass'y	-hp-	
	A30	09100-69921		1	Keyboard Ass'y	-hp-	
	A3/A4	09100-69595		1	PC Ass'y: Core Driver/Core Sense Amp (2)	-hp-	
	A5	09100-69555		1	PC Ass'y: Bottom	-hp-	
	A1	09100-69551		1	PC Ass'y: Control Logic	-hp-	
	A20A2	09100-69522		1	PC Ass'y: Power Supply	-hp-	
	A21	09100-69521		1	PC Ass'y: Low Voltage Power Supply	-hp-	
	A16	09100-69516		1	PC Ass'y: Vertical Deflection Amplifier	-hp-	
	A15	09100-69515		1	PC Ass'y: Horizontal Deflection Amplifier	-hp-	
	A2	09100-69502		1	PC Ass'y: Flip Flop	-hp-	
		09120-88702		1	Paint: Touch Up	-hp-	
		09100-90030		1	Manual: Service	-hp-	
		09100-90024		1	Program Card: Diagnostic	-hp-	
		09100-68702		1	Plastic Box: w/parts (expanded below)	-hp-	
		09100-68701		1	Tool Kit: w/tools (expanded below)	-hp-	
		11130C			**9100B SERVICE KIT**	-hp-	
					Same as 11130B Service Kit with the following additions and deletions.		
					ADD:		
		9220-1575		1	Insert: Printer, Plotter	000LB	obd
		9220-1515		1	Bottom Filler: Calculator, Ethafoam	000LB	obd
		9220-1514		2	Top Filler: Styrafoam	000LB	obd
					DELETE:		
		9220-1543		1	Pad Corrugated	18473	obd
		9220-1135		5	Pad-Foam: 6.625 x 4.875 x .625 thk, char gra, polye	000LB	obd
		9220-1134		4	Pad-Foam: 12 x 7.375 x 1, Top, char gra, polye	000LB	obd
		9220-1133		1	Pad-Foam: 16.125 x 7.375 x 1, Top, char gra, polye	000LB	obd
		9220-1128		4	Pad-Foam: for Logic and Flip Flop boards, char gra, polye	000LB	obd

	REFERENCE DESIGNATOR	-hp- PART NO.		TQ	DESCRIPTION	MFR.	MFR. PART NO.
		9220-1127		1	Pad-Foam: Bottom, Card Reader Ass'y, char gra, polye	000LB	obd
		9220-1126		2	Pad-Foam: Die cut and Laminated, char gra, polye	000LB	obd
		9220-1125		3	Pad-Foam: Vertical and Horizontal Deflection Amplifier, Bottom Pad, char gra, polye	000LB	obd
		9220-1123		1	Pad-Foam: Keyboard Pack, char gra, polye	000LB	obd
		9220-1122		1	Pad-Foam: Keyboard Pack, char gra, polye	000LB	obd
		9211-0926		4	Carton-Selflock: 7 x 5-1/8 x 2-1/4 hi, wht	27463	obd
		9211-0925		1	Carton-Corrugated: RSC, 16-1/8 x 14-1/2 x 6-7/8, wht	18473	obd
		9211-0923		5	Carton-Selflock: 12-1/4 x 7-5/8 x 2-1/4 dp, wht	27463	obd
		9211-0922		3	Carton-Corrugated: 16-1/2 x 7-5/8 x 5-1/8 hi, S/W, wht	27463	obd
		11130D			9100B SERVICE KIT	-hp-	
					Same as 11130B Service Kit with the following additions and deletions.		
					ADD:		
		9211-0924		1	Carton-Selflock: 12-1/8 x 7-5/8 x 4-7/8 hi, wht	18473	obd
		9211-0091		1	Carton-Packing: 24-7/8 x 18-3/4 x 15-1/8, wht	-hp-	obd
		9220-0168		1	Pack-Styrafoam	-hp-	
					DELETE:		
		09120-88702		1	Paint: Touch Up	-hp-	
		09100-90024		1	Program Card: Diagnostic	-hp-	
		09100-68702		1	Plastic Box: w/parts	-hp-	
		09100-68701		1	Tool Kit: w/tools	-hp-	
	A20A2	09100-66522		1	PC Ass'y: Power Supply	-hp-	
	A21	09100-66521		1	PC Ass'y: Low Voltage Power Supply	-hp-	
	A16	09100-66516		1	PC Ass'y: Vertical Deflection Amplifier	-hp-	
	A15	09100-66515		1	PC Ass'y: Horizontal Deflection Amplifier	-hp-	
	V1	5083-1551		1	CRT-Calculator	-hp-	
		5000-7196		4	Plate: Castor Support	-hp-	
		8500-0810		1	Cleaner: Mag Hd, 4 oz. bottle	000LA	obd
		1490-0895		4	Caster: Swivel, soft rubber tread, Cad-P, 3.0 D wheel, 1-1/4 wd	000LM	3-9-101
		9310-0061		1	Cloth-Cleaning: 27 x 27, heavyweight, wht	00LNN	birdseye
		9211-0921		1	Carrying Case, fiberglass, 25 x 19 x 16.75	000LL	MOD CR-340
		9211-0922		1	Carton-Corrugated: selflock, 16-1/2 x 7-5/8 x 5-1/8 hi, S/W, wht	27463	obd
		9211-0923		3	Carton-Selflock: 12-1/4 x 7-5/8 x 2-1/4 dp, wht	27463	obd
		9211-0926		4	Carton-Selflock: 7 x 5-1/8 x 2-1/4 hi, wht	27463	obd
		9220-1125		3	Pad-Foam: Vertical and Horizontal Amplifiers, Bottom, char gra, polye	000LB	obd
		9220-1126		3	Pad-Foam: Die cut and Laminated, char gra, polye	000LB	obd
		9220-1128		4	Pad-Foam: for Logic and Flip Flop, char gra, polye	000LB	obd
		9220-1135		5	Pad-Foam: 6.625 x 4.875 x .625 thk, char gra, polye	000LB	obd
		9220-1545		1	Pad-Foam: 12.25 x 9 x 2 dp, wht, Exp polysty	19706	obd

	REFERENCE DESIGNATOR	-hp- PART NO.		TQ	DESCRIPTION	MFR.	MFR. PART NO.
		09100-68701			TOOL KIT	-hp-	
		9300-0367		1	Carrying Case: Tool Kit	000LC	obd
		8730-0008		1	Pocket Screwdriver: 2 blade, 4" lg, Stl	88137	obd
		8730-0004		1	Screwdriver-Phillips: .25 bit, 4" lg, PH	88137	obd
		8730-0001		1	Screwdriver-Flat Head: .25 bit, 4" lg	88137	obd
		8720-0014		1	Wrench-Combination: 1/4" open, Stl, Chrome-P	000LD	obd
		8720-0003		1	Wrench-Hex Socket: .313 x 6.88lg, Ni-P, 5/16"	000LD	obd
		8720-0002		1	Wrench-Hex Socket: .25 x 6 lg, chrome-P, 1/4"	88137	obd
		8710-0016		1	Pliers-Electronic: med longnose, 5-3/4"	88137	obd
		8710-0857		1	Wrench-Hex Key: short series, .05 AF, Stl,	000LP	773-110069
		8700-0003		1	Knife-Xacto: replaceable blade, 5.0" lg, al.	00LOB	obd
		8690-0071		1	Soldering Iron: 60W, 120V, 7.5 lg, w/o tip	88137	obd
		8690-0060		1	Desoldering Tool: vacuum action, mtl bdy, teflon tip, blk plunger knob	91920	obd
		8690-0021		1	Soldering Iron Tip: .125 wd, 2.750 lg	91920	obd
		8520-0015		1	Brush-Acid: 5-7/8 lg, .875 bristle, .375 wd	000LF	9502
		8500-0929		1	Anti-Static Fluid: 1-1/4 oz. bottle, for glass or plstc sheets	000LH	obd
		8500-0893		1	Silicon Grease: non-melting, translu, moisture proof, 2 oz. tube	00LOF	5
		09100-68702			PLASTIC BOX PARTS	-hp-	
		1540-0106		1	Box-Plastic: 10.375 x 6 x 2 dp, clear plstc	73506	518
		3101-1179		2	Switch: Toggle, DPDT, 3A, 125VAC, ON-NONE-ON	00LNI	MSW20N
		3050-0003		10	Washer-Flat: Fiber, .375 OD, .1406 ID, 3/64	73734	1471
		2360-0195		10	Screw-Mach: PH, pozi, .312 x 6-32, SS	00LOC	obd
		2140-0301		20	Lamp-Incd: T, 1-3/4 bulb, 14V, .08A, Bi-pin	71744	7382
		2110-0012		10	Fuse: .5A, 250V, normal-blo	71400	AGC 1/2
		2110-0312		10	Fuse: 1A, 250V, slo-blo	71400	MDL-1
		2110-0003		10	Fuse: 3A, 250V, normal-blo	71400	AGC-3
		1901-0522		2	Diode: 3A, 100PIV	14099	3SM2
		1854-0063		1	TSTR: NPN, Si, 2N3055	04713	obd
		1200-0050		10	Contact-CRT: Socket, phz brz, silver-P	72825	9553-1
		0624-0248		10	Screw-Tapping: Hex Hd, Hex Dr, 8-32 x .750 lg, Stl, Cad-P, Taptite	72228	obd
		0624-0247		10	Screw-Tapping: Hex Hd, Hex Dr, 6-32 x .750 lg, Stl, Cad-P, Taptite	72228	obd
		0624-0246		10	Screw-Tapping: Hex He, Hex Dr, 6-32 x .500 lg, Stl, Cad-P, Taptite	72228	obd
		0624-0209		10	Screw-Tapping: PH, pozi, 6-32 x .750 lg, Stl, Cad-P, Taptite	72228	obd
		0624-0078		10	Screw-Tapping: PH, pozi, 6-32 x .375 lg, Stl, Cad-P, Taptite	72228	obd
		0624-0027		10	Screw-Tapping: Round Hd, 6-20 x .500 lg, Stl,	73734	7522
		0362-0192		10	Term Crimp Lug: phs, brz, .046 sq F, pushon, 24-20 awg AU-F	91886	2611225-12
		2190-0918		10	Washer-Lock: Hel, No. 6, Heavy, SS, Pass, .141 ID, .269 OD, .040 thk	20859	obd

REFERENCE DESIGNATOR	-hp- PART NO.		TQ	DESCRIPTION	MFR.	MFR. PART NO.
	K10-9100A			**DISPLAY MODIFICATION KIT FOR 9150A**		
	09100-91010		1	Board Ass'y: Horizontal Deflection Amplifier (Current Source)	-hp-	
C1	0180-1746		1	C: fxd tant, 15uf, 20vdcw, 10%	90201	TAS156K020-PIC
C2	0160-3099		1	C: fxd polycarb, .10uf, 50vdcw, 10%	84411	Type 463VW
C3	0160-2735		1	C: fxd mica, 1000pf, 100vdcw, 5%	00853	obd
CR1 thru CR3	1901-0040		3	Diode: Si	01295	PG512
L1	9140-0210		1	Coil: Molded Choke, 100uh, 5%, .375 x .155	82412	15-1315-12J
Q1	5080-4670		2	TSTR: NPN, Si, 2N3904	04713	SPS3611
Q2	5080-4663		4	TSTR: PNP, Si	04713	SS5651
Q3	5080-9030		3	TSTR: NPN, Si	04713	SS9333
Q4	5080-4663			TSTR: PNP, Si	04713	SS5651
Q5	5080-4658		1	TSTR: PNP, Si, 2N3638	04713	SPS3320
Q6	5080-4660		1	TSTR: PNP, Si, 2N3906	04713	SPS3612
Q7	5080-4670			TSTR: NPN, Si, 2N3904	04713	SPS3611
Q8, Q9	1854-0234		2	TSTR: NPN, Si, 2N3440	86684	obd
Q10	5080-4663			TSTR: PNP, Si	04713	SS5651
Q11, Q12,	5080-9030			TSTR: NPN, Si	04713	SS9333
Q13	5080-4663			TSTR: PNP, Si	04713	SS5651
Q14 thru Q18	1854-0023		5	TSTR: NPN, Si	07263	S3620
R1	0757-0440		1	R: fxd flm, 7500 ohms, 1/8W, 1%	14674	C4 T-O
R2	0698-3441		1	R: fxd flm, 215 ohms, 1/8W, 1%	14674	C4 T-O
R3	0698-0084		2	R: fxd flm, 2150 ohms, 1/8W, 1%	14674	C4 T-O
R4	0698-3155		1	R: fxd flm, 4640 ohms, 1/8W, 1%	14674	C4 T-O
R5	0686-3945		1	R: fxd comp, 390 kilohms, 1/2W, 5%	01121	EB3945
R6	0764-0007		2	R: fxd met oxide, 27 kilohms, 2W, 5%	14674	C4 2S
R7				Not Assigned		
R8	0764-0007			R: fxd met oxide, 27 kilohms, 2W, 5%	14674	C4 2S
R9				Not Assigned		
R10	0698-3443		1	R: fxd flm, 287 ohms, 1/8W, 1%	14674	C4 T-O
R11	0757-0435		1	R: fxd flm, 3920 ohms, 1/8W, 1%	91637	IMF-1/10-32, T-1
R12	0757-1094		1	R: fxd flm, 1470 ohms, 1/8W, 1%	91637	IMF-1/10-32, T-1
R13	0757-0462		1	R: fxd flm, 75 kilohms, 1/8W, 1%	91637	CMF-1/10-32, T-1
R14	0698-3160		1	R: fxd flm, 31600 ohms, 1/8W, 1%	14674	C4 T-O
R15	0757-0465		1	R: fxd flm, 100 kilohm, 1/8W, 1%	14674	C4 T-O
R16	0757-0441		1	R: fxd flm, 8250 ohms, 1/8W, 1%	14674	C4 T-O
R17	0698-3498		1	R: fxd flm, 8660 ohms, 1/8W, 1%	14674	C4 T-O
R18	0757-0442		1	R: fxd flm, 10 kilohm, 1/8W, 1%	14674	C4 T-O
R19, R20, R21	2100-2533		1	R: Set, var comp, 10K/2K/3K, 20%	71590	Series 70-3
R22	0757-0410		2	R: fxd flm, 301 ohms, 1/8W, 1%	14674	C4 T-O
R23	0698-3444		1	R: fxd flm, 316 ohms, 1/8W, 1%	91637	CMF-1/10-32, T-1
R24	0757-0280		1	R: fxd flm, 1 kilohm, 1/8W, 1%	14674	C4 T-O
R25, R26	0698-3439		2	R: fxd flm, 178 ohms, 1/8W, 1%	91637	CMF-1/10-32, T-1
R27	0698-0084			R: fxd flm, 2150 ohms, 1/8W, 1%	14674	C4 T-O
R28	0698-4406		1	R: fxd flm, 115 ohms, 1/8W, 1%	91537	CMF-1/10-32, T-1
R29	0698-4456		1	R: fxd flm, 549 ohms, 1/8W, 1%	14674	C4 T-O
R30	0757-0410			R: fxd flm, 301 ohms, 1/8W, 1%	14674	C4 T-O
R31	0698-3446		1	R: fxd flm, 383 ohms, 1/8W, 1%	91637	CMF-1/10-32, T-1
	09100-91011		1	Board Ass'y: Vertical Deflection Amplifier (Current Source)	-hp-	
C1	0150-0121		1	C: fxd cer, .1uf, 50vdcw, -20 +80%, .5 lg, .325 wd, 1.25 thk	56289	SG 50B1-CML

REFERENCE DESIGNATOR	-hp- PART NO.		TQ	DESCRIPTION	MFR.	MFR. PART NO.
C2	0160-2502		1	C: fxd polycarb, .33uf, 100vdcw, .609D x 1.438 lg	84411	HEW-82
C3	0180-1746		1	C: fxd tant, 15uf, 20vdcw, 10%	90201	TAS156K020PIC
C4	0160-2189		1	C: fxd mylar, 0.012uf, 200vdcw, 5%	56289	192 P12352-PTS
CR1	1901-0040		2	Diode: Si	01295	PG 512
CR2 thru CR4	1901-0025		3	Diode: Si, 100mA, 500nA, 150V, 12pf	01295	UG1464-2
CR5	1901-0040			Diode: Si	01295	PG 512
L1	9140-0210		1	Coil: Molded Choke, 100uh, 5%, .375 x .155	82142	15-1315-12J
Q1	5080-4663		3	TSTR: PNP, Si	04713	SS5651
Q2	5080-4670		2	TSTR: NPN, Si, 2N3904	04713	SPS3611
Q3	5080-4658		1	TSTR: PNP, Si, 2N3638	04713	SPS3320
Q4	5080-4660		1	TSTR: PNP, Si, 2N3906	04713	SPS3612
Q5, Q6	1854-0234		4	TSTR: NPN, Si, 2N3440	86684	obd
Q7	5080-9030		2	TSTR: NPN, Si	04713	SS9333
Q8, Q9	5080-4663			TSTR: PNP, Si	04713	SS5651
Q10	5080-9030			TSTR: NPN, Si	04713	SS9333
Q11	5080-4670			TSTR: NPN, Si, 2N3904	04713	SPS3611
Q12, Q13	1854-0234			TSTR: NPN, Si, 2N3440	86684	obd
Q14 thru Q18	1854-0023		5	TSTR: NPN, Si	07263	S3620
R1	0757-0198		1	R: fxd met flm, 100 ohms, 1/2W, 1%	91637	MFF-1/2-10, T-1
R2	0698-3404		1	R: fxd met flm, 383 ohms, 1/2W, 1%	91637	MFF-1/2-10, T-1
R3	0683-1025		1	R: fxd comp 1 kilohm, 1/4W, 5%	01121	CB1025
R4	0757-0281		1	R: fxd flm, 2740 ohms, 1/8W, 1%	00LNM	CEA T-O
R5	0757-0280		4	R: fxd flm, 1 kilohm, 1/8W, 1%	14674	C4 T-O
R6	0698-4396		1	R: fxd flm, 80.6 ohms, 1/8W, 1%	14674	C4 T-O
R7	0698-4438		1	R: fxd flm, 3090 ohms, 1/8W, 1%	00LNM	CEA T-O
R8	0686-3945		1	R: fxd comp, 390 kilohms, 1/2W, 5%	01121	EB3945
R9	0757-0424		1	R: fxd flm, 1100 ohms, 1/8W, 1%	14674	C4 T-O
R10	0764-0031		2	R: fxd met oxide, 47 kilohms, 2W, 5%	14674	C-42S
R11, R12	0686-2245		2	R: fxd comp, 220 kilohms, 1/2W, 5%	01121	EB2245
R13	0764-0031			R: fxd met oxide, 47 kilohms, 2W, 5%	14674	C-42S
R14	0698-4454		1	R: fxd flm, 523 ohms, 1/8W, 1%	91637	IMF-1/10-32, T-1
R15	0757-0416		1	R: fxd flm, 511 ohms, 1/8W, 1%	14674	C4 T-O
R16	0757-0283		1	R: fxd flm, 2 kilohms, 1/8W, 1%	14674	C4 T-O
R17	0698-0083		1	R: fxd flm, 1960 ohms, 1/8W, 1%	14674	C4 T-O
R18	0757-0443		1	R: fxd flm, 11 kilohms, 1/8W, 1%	14674	C4 T-O
R19	0757-0273		1	R: fxd flm, 3010 ohms, 1/8W, 1%	91637	MFF-1/10-32, T-1
R20	0757-0280			R: fxd flm, 1 kilohm, 1/8W, 1%	14674	C4 T-O
R21, R22, R23	2100-2534		1	R: Set, var comp, 125K/7K/2K, 20%	71590	Series 70-3
R24	0698-3446		1	R: fxd flm, 383 ohms, 1/8W, 1%	91637	CMF-1/10-32, T-1
R25	0698-4395		1	R: fxd flm, 78.7 ohms, 1/8W, 1%	91637	IMF-1/10-32, T-1
R26	0698-4413		1	R: fxd flm, 154 ohms, 1/8W, 1%	91637	IMF-1/10-32, T-1
R27	0757-0280			R: fxd flm, 1 kilohm, 1/8W, 1%	14674	C4 T-O
R28, R29				Not assigned		
R30	0757-0280			R: fxd flm, 1 kilohm, 1/8W, 1%	14674	C4 T-O
	09100-91003		1	Board Ass'y: Low Voltage Power Supply	-hp-	
C1	0160-0166		1	C: fxd mylar, 0.068uf, 200vdcw, 10%	56289	192P68392-PTS
C2	0180-1997		1	C: fxd al elect, 20uf, 150vdcw, +50 −10%	56289	30D206F150DH2-DSM
C3	0180-0050		1	C: fxd flm, 40uf, 50vdcw, −15 +100%	56289	30D406G050DD2-DSM
C4	0180-0097		1	C: fxd tant, 47uf, 35vdcw, 10%	56289	150D476X903552-DYS
C5	0180-0161		1	C: fxd flm, 3.3uf, 35vdcw, 20%	56289	150D335X003B2-DYS
C6	0140-0197		1	C: fxd mica, 180pf, 5%	00853	obd
CR1	1901-0030		1	Diode: Si, 800PIV, .60A, .36 x .15 bdy, gra stripe	04713	SR1358-11
CR2	1901-0158		1	Diode: Si, 200PIV, .75A, .205 x .107 bdy, red stripe	04713	SR1358-3
CR3	1902-0049		1	Diode: bkdn, 6.19V, 400mw, 5%	04713	SZ 10939-122

REFERENCE DESIGNATOR	-hp- PART NO.	TQ	DESCRIPTION	MFR.	MFR. PART NO.
CR4, CR5	1902-3301	2	Diode: bkdn, 34.8V, 400mw, 5%	04713	SZ 10939-338
CR6	1901-0096	1	Diode: Si, 120V, 3pf, 100ns	01295	UG-888-1
CR7 thru CR10	1901-0040	4	Diode: Si	01295	PG 512
Q1	1854-0062	1	TSTR: NPN, Si	86684	38658
Q2	5080-9030	2	TSTR: NPN, Si	04713	SS9333
Q3	5080-4670	1	TSTR: NPN, Si, 2N3904	04713	SPS3611
Q4	5080-9030		TSTR: NPN, Si	04713	SS9333
Q5, Q6	5080-4660	2	TSTR: PNP, Si, 2N3906	04713	SPS3612
Q7, Q8	5080-4663	2	TSTR: PNP, Si	04713	SS5651
R1, R13, R19	2100-2532	1	R: Set, var comp, 150K/2K/250K, 20%	71590	Series 70-3
R2	0684-1531	1	R: fxd comp, 15 kilohms, 1/4W, 10%	01121	CB1531
R3	0684-4711	1	R: fxd comp, 470 ohms, 1/4W, 10%	01121	CB4711
R4	0684-1021	1	R: fxd comp, 1 kilohm, 1/4W, 10%	01121	CB1021
R5	0698-3412	1	R: fxd met flm, 3830 ohms, 1/2W, 1%	91637	MFF-1/2, 10, T-1
R6	0758-0033	1	R: fxd flm, 2 kilohms, 1/4W, 5%	14674	C5 T-O
R7	0683-6835	3	R: fxd comp, 68 kilohms, 1/4W, 5%	01121	CB6835
R8	0686-1035	1	R: fxd comp, 10 kilohms, 1/2W, 5%	01121	EB1035
R9	0683-6835		R: fxd comp, 68 kilohms, 1/4W, 5%	01121	CB6835
R10	0757-0428	1	R: fxd flm, 1620 ohms, 1/8W, 1%	14674	C4 T-O
R11	0757-0317	1	R: fxd flm, 1330 ohms, 1/8W, 1%	14674	C4 T-O
R12	0757-0439	1	R: fxd flm, 6810 ohms, 1/8W, 1%	91637	IMF-1/10-32, T-1
R14	0698-3447	1	R: fxd flm, 422 ohms, 1/8W, 1%	91637	CMF-1/10-32, T-1
R15	0683-5125	1	R: fxd comp, 5100 ohms, 1/4W, 5%	01121	CB5125
R16	0683-6835		R: fxd comp, 68 kilohms, 1/4W, 5%	01121	CB6835
R17	0683-1645	1	R: fxd comp, 160 kilohms, 1/4W, 5%	01121	CB1645
R18	0684-4741	1	R: fxd comp, 470 kilohms, 1/4W, 10%	01121	CB4741
R20	0683-1325	1	R: fxd comp, 1300 ohms, 1/4W, 5%	01121	CB1325
R21	0683-1615	1	R: fxd comp, 160 ohms, 1/4W, 5%	01121	CB1615
R22	0683-1035	2	R: fxd comp, 10 kilohms, 1/4W, 5%	01121	CB1035
R23	0684-4721	1	R: fxd comp, 4700 ohms, 1/4W, 10%	01121	CB4721
R24	0683-1035		R: fxd comp, 10 kilohms, 1/4W, 5%	01121	CB1035
R25	0683-1215	1	R: fxd comp, 120 ohms, 1/4W, 5%	01121	CB1215
R26	0686-5615	1	R: fxd comp, 560 ohms, 1/2W, 5%	01121	EB5651
	09100-91012	1	Cable Ass'y: Internal	-hp-	
	1251-0333	1	Connector-PC: 20 cont, ribbon type	71785	251-10-30-261
	09100-47603	2	Boot Connector: molded polycarbonate	-hp-	
	09160-91001	1	Extender Adaptor Connector (for use with 9150A large screen display. Not supplied with K10).	-hp-	
	1250-0204	3	Recpt Mini: BNC Conn, .31 D mtg hole	000LE	20JR123-1
	1251-2048	1	Conn: 44 pin, ribbon type, grn, .125 D hole	05574	000201-0292
	4040-0727	1	Hood-Conn: Piggyback, Top half	-hp-	
	4040-0728	1	Hood-Conn: Piggyback, Bottom half	-hp-	
	7120-1362	1	Decal: Output Identification	17342	obd
	9140-0129	2	Coil: fxd RF, 220uh, 5%, .375 bdy x .155	82142	15-1315-20J
	09160-04301	1	Plate: Grounding	-hp-	
	09160-26503	1	PC Board: Blank feed-thru	-hp-	
	09100-01014	1	End Plug	-hp-	

	REFERENCE DESIGNATOR	-hp- PART NO.		TQ	DESCRIPTION	MFR.	MFR. PART NO.
		K03-9100A			**DISPLAY MODIFICATION KIT FOR 1300A**		
		09100-91001		1	Board Ass'y: Horizontal Deflection Amplifier (Voltage Source)	-hp-	
	C1	0180-1746		1	C: fxd tant, 15uf, 20vdcw, 10%	90201	TAS156K020-PIC
	C2	0160-3099		1	C: fxd polycarb, .1uf, 50vdcw, 10%	84411	Type 463VW
	C3	0160-2735		1	C: fxd mica, 100pf, 100vdcw, 5%	00853	obd
	CR1 thru CR3	1901-0040		3	Diode: Si	01295	PG512
	L1	9140-0210		1	Coil: Molded choke, 100uh, 5%, .375 x .155	82142	15-1315-12J
	Q1	5080-4670		2	TSTR: NPN, Si, 2N3904	04713	SPS3611
	Q2	5080-4663		4	TSTR: PNP, Si	04713	SS5651
	Q3	5080-9030		5	TSTR: NPN, Si	04713	SS9333
	Q4	5080-4663			TSTR: PNP, Si	04713	SS5651
	Q5	5080-4658		1	TSTR: PNP, Si, 2N3638	04713	SPS3320
	Q6	5080-4660		1	TSTR: PNP, Si, 2N3906	04713	SPS3612
	Q7	5080-4670			TSTR: NPN, Si, 2N3906	04713	SPS3611
	Q8, Q9	1854-0234		2	TSTR: NPN, Si, 2N3440	86684	obd
	Q10	5080-4663			TSTR: PNP, Si	04713	SS5651
	Q11, Q12	5080-9030			TSTR: NPN, Si	04713	SS9333
	Q13	5080-4663			TSTR: PNP, Si	04713	SS5651
	Q14, Q15	5080-9030			TSTR: NPN, Si	04713	SS9333
	Q16	1853-0001		1	TSTR: PNP, Si, 2N1132	01295	SM1016B
	R1	0757-0440		1	R: fxd flm, 7500 ohm, 1/8W, 1%	14674	C4 T-O
	R2	0698-3441		1	R: fxd flm, 215 ohms, 1/8W, 1%	14674	C4 T-O
	R3	0698-0084		1	R: fxd flm, 2150 ohms, 1/8W, 1%	14674	C4 T-O
	R4	0698-3155		1	R: fxd flm, 4640 ohms, 1/8W, 1%	14674	C4 T-O
	R5	0686-3945		1	R: fxd comp, 390 kilohms, 1/2W, 5%	01121	EB3945
	R6	0764-0007		2	R: fxd met oxide, 27 kilohms, 2W, 5%	14674	C4 2S
	R7	0757-0418		1	R: fxd flm, 619 ohms, 1/8W, 1%	14674	C4 T-O
	R8	0764-0007			R: fxd met oxide, 27 kilohms, 2W, 5%	14674	C4 2S
	R9	0757-0419		1	R: fxd flm, 681 ohms, 1/8W, 1%	14674	C4 T-O
	R10	0698-3443		1	R: fxd flm, 287 ohms, 1/8W, 1%	14674	C4 T-O
	R11	0757-0435		1	R: fxd flm, 3920 ohms, 1/8W, 1%	91637	IMF-1/10-32, T-1
	R12	0757-1094		1	R: fxd flm, 1470 ohms, 1/8W, 1%	91637	IMF-1/10-32, T-1
	R13	0757-0462		1	R: fxd flm, 75 kilohms, 1/8W, 1%	91637	CMF-1/10-32, T-1
	R14	0698-3160		1	R: fxd flm, 31600 ohms, 1/8W, 1%	14674	C4 T-O
	R15	0757-0465		1	R: fxd flm, 100 kilohms, 1/8W, 1%	14674	C4 T-O
	R16	0757-0441		1	R: fxd flm, 8250 ohms, 1/8W, 1%	14674	C4 T-O
	R17	0698-3498		1	R: fxd flm, 8660 ohms, 1/8W, 1%	14674	C4 T-O
	R18	0757-0442		1	R: fxd flm, 10 kilohms, 1/8W, 1%	14674	C4 T-O
	R19 thru R21	2100-2533		1	R: Set, var comp, 10K/2K/3K, 20%	71590	Series 70-3
	R22	0683-5645		1	R: fxd comp, 560 kilohms, 1/4W, 5%	01121	CB5645
	R23	0683-2735		1	R: fxd comp, 27 kilohms, 1/4W, 5%	01121	CB2735
	R24	0683-2225		2	R: fxd comp, 2200 ohms, 1/4W, 5%	01121	CB2225
	R25	0683-2215		1	R: fxd comp, 220 ohms, 1/4W, 5%	01121	CB2215
	R26	0683-1025		1	R: fxd comp, 1 kilohm, 1/4W, 5%	01121	CB1025
	R27	0683-1015		1	R: fxd comp, 100 ohms, 1/4W, 5%	01121	CB1015
	R28	0683-6825		1	R: fxd comp, 6800 ohms, 1/4W, 5%	01121	CB6825
	R29	0683-2225			R: fxd comp, 2200 ohms, 1/4W, 5%	01121	CB2225
	R30	0698-5843		1	R: fxd carb comp, 430 kilohms, 1/4W, 5%	01121	CB4345
	R31	0683-3325		1	R: fxd comp, 3300 ohms, 1/4W, 5%	01121	CB3325
		09100-91002		1	Board Ass'y: Vertical Deflection Amplifier (Voltage Source)	-hp-	
	C1	0150-0121		1	C: fxd cer, .1uf, 50vdcw, –20 +80%, .500 lg x 3.25 wd, 1.25 thk	56289	SG50B1-CML

REFERENCE DESIGNATOR	-hp- PART NO.	TQ	DESCRIPTION	MFR.	MFR. PART NO.
C2	0160-2502	1	C: fxd polycarb, .33uf, 100vdcw, 10%, .609D x 1.438 lg	84411	HEW-82
C3	0180-1746	1	C: fxd tant, 15uf, 20vdcw, 10%	90201	TAS156K020-PIC
C4	0160-2189	1	C: fxd mylar, 0.012uf, 200vdcw, 5%	56289	192P12352-PTS
CR1	1901-0040	2	Diode: Si	01295	PG512
CR2 thru CR4	1901-0025	3	Diode: Si, 100mA, 500nA, 150V, 12pf	01295	UG1464-2
CR5	1901-0040		Diode: Si	01295	PG512
L1	9140-0210	1	Coil: Molded Choke, 100uh, 5%, .375 x .155	82142	15-1315-12J
Q1	5080-4663	3	TSTR: PNP, Si	04713	SS5651
Q2	5080-4670	2	TSTR: NPN, Si, 2N3904	04713	SPS3611
Q3	5080-4658	1	TSTR: PNP, Si, 2N3638	04713	SPS3320
Q4	5080-4660	1	TSTR: PNP, Si, 2N3906	04713	SPS3612
Q5, Q6	1854-0234	4	TSTR: NPN, Si 2N3440	86684	obd
Q7	5080-9030	4	TSTR: NPN, Si	04713	SS9333
Q8, Q9	5080-4663		TSTR: PNP, Si	04713	SS5651
Q10	5080-9030		TSTR: NPN, Si	04713	SS9333
Q11	5080-4670		TSTR: NPN, Si, 2N3904	04713	SPS3611
Q12, Q13	1854-0234		TSTR: NPN, Si, 2N3440	86684	obd
Q14, Q15	5080-9030		TSTR: NPN, Si	04713	SS9333
Q16	1853-0001	1	TSTR: PNP, Si, 2N1132	01295	SM1016B
R1	0757-0198	1	R: fxd flm, 100 ohms, 1/2W, 1%	91637	MFF-1/2-10, T-1
R2	0698-3404	1	R: fxd met flm, 383 ohms, 1/2W, 1%	91637	MFF-1/2-10, T-1
R3	0683-1025	2	R: fxd comp, 1 kilohm, 1/4W, 5%	01121	CB1025
R4	0757-0281	1	R: fxd flm, 2740 ohms, 1/8W, 1%	00LNM	CEA T-O
R5	0757-0280	2	R: fxd flm, 1 kilohm, 1/8W, 1%	14674	C4 T-O
R6	0698-4396	1	R: fxd flm, 80.6 ohms, 1/8W, 1%	14674	C4 T-O
R7	0698-4438	1	R: fxd flm, 3090 ohms, 1/8W, 1%	00LNM	CEA T-O
R8	0686-3945	1	R: fxd comp, 390 kilohm, 1/2W, 5%	01121	EB3945
R9	0698-0084	1	R: fxd flm, 2150 ohms, 1/8W, 1%	14674	C4 T-O
R10	0764-0031	2	R: fxd met oxide, 47 kilohms, 2W, 5%	14674	C-42S
R11, R12	0686-2245	2	R: fxd comp, 220 kilohms, 1/2W, 5%	01121	EB2245
R13	0764-0031		R: fxd met oxide, 47 kilohms, 2W, 5%	14674	C-42S
R14	0757-0417	1	R: fxd flm, 562 ohms, 1/8W, 1%	14674	C4 T-O
R15	0757-0416	1	R: fxd flm, 511 ohms, 1/8W, 1%	14674	C4 T-O
R16	0757-0283	1	R: fxd flm, 2 kilohms, 1/8W, 1%	14674	C4 T-O
R17	0698-0083	1	R: fxd flm, 1960 ohms, 1/8W, 1%	14674	C4 T-O
R18	0757-0443	1	R: fxd flm, 11 kilohms, 1/8W, 1%	14674	C4 T-O
R19	0757-0273	1	R: fxd flm, 3010 ohms, 1/8W, 1%	91637	MFF-1/10-32, T-1
R20	0757-0280		R: fxd flm, 1 kilohm, 1/8W, 1%	14674	C4 T-O
R21, R22, R23	2100-2534	1	R: Set, var comp, 125K/7K/2K, 20%	71590	Series 70-3
R24	0698-5843	1	R: fxd carb comp, 430 kilohms, 1/4W, 5%	01121	CB4345
R25	0683-3325	1	R: fxd comp 3300 ohms, 1/4W, 5%	01121	CB3325
R26	0683-2215	1	R: fxd comp, 220 ohms, 1/4W, 5%	01121	CB2215
R27	0683-2225	2	R: fxd comp, 2200 ohms, 1/4W, 5%	01121	CB2225
R28	0683-6825	1	R: fxd comp, 6800 ohms, 1/4W, 5%	01121	CB6225
R29	0683-2735	1	R: fxd comp 27 kilohms, 1/4W, 5%	01121	CB2735
R30	0683-2225		R: fxd comp, 2200 ohms, 1/4W, 5%	01121	CB2225
R31	0683-1015	1	R: fxd comp, 100 ohms, 1/4W, 5%	01121	CB1015
R32	0683-1025		R: fxd comp, 1 kilohm, 1/4W, 5%	01121	CB1025
R33	0683-5645	1	R: fxd comp, 560 kilohms, 1/4W, 5%	01121	CB5645
	09100-91003	1	Board Ass'y: Low Voltage Power Supply	-hp-	
C1	0160-0166	1	C: fxd mylar, 0.068uf, 200vdcw, 10%	56289	192P68392-PTS
C2	0180-1997	1	C: fxd al elect, 20uf, 150vdcw, +50 −10%	56289	30D206F150DH2-DSM
C3	0180-0050	1	C: fxd flm, 40uf, 50vdcw, −15 +100%	56289	30D406G050DD2-DSM
C4	0180-0097	1	C: fxd tant, 47uf, 35vdcw, 10%	56289	150D476X903552-DYS
C5	0180-0161	1	C: fxd flm, 3.3uf, 35vdcw, 20%	56289	150D335X003B2-DYS
C6	0140-0197	1	C: fxd mica, 180pf, 5%	00853	obd

REFERENCE DESIGNATOR	-hp- PART NO.	TQ	DESCRIPTION	MFR.	MFR. PART NO.
CR1	1901-0030	1	Diode: Si, 800PIV, .60A, .36 x .15 bdy, gra stripe	04713	SR1358-11
CR2	1901-0158	1	Diode: Si, 200PIV, .75A, .205 x .107 bdy, red stripe	04713	SR1358-3
CR3	1902-0049	1	Diode: bkdn, 6.19V, 400mw, 5%	04713	SZ 10939-122
CR4, CR5	1902-3301	2	Diode: bkdn, 34.8V, 400mw, 5%	04713	SZ 10939-338
CR6	1901-0096	1	Diode: Si, 120V, 3pf, 100ns	01295	UG-888-1
CR7 thru CR10	1901-0040	4	Diode: Si	01295	PG 512
Q1	1854-0062	1	TSTR: NPN, Si	86684	38658
Q2	5080-9030	2	TSTR: NPN, Si	04713	SS9333
Q3	5080-4670	1	TSTR: NPN, Si, 2N3904	04713	SPS3611
Q4	5080-9030		TSTR: NPN, Si	04713	SS9333
Q5, Q6	5080-4660	2	TSTR: PNP, Si, 2N3906	04713	SPS3612
Q7, Q8	5080-4663	2	TSTR: PNP, Si	04713	SS5651
R1, R13, R19	2100-2532	1	R: Set, var comp, 150K/2K/250K, 20%	71590	Series 70-3
R2	0684-1531	1	R: fxd comp, 15 kilohms, 1/4W, 10%	01121	CB1531
R3	0684-4711	1	R: fxd comp, 470 ohms, 1/4W, 10%	01121	CB4711
R4	0684-1021	1	R: fxd comp, 1 kilohm, 1/4W, 10%	01121	CB1021
R5	0698-3412	1	R: fxd met flm, 3830 ohms, 1/2W, 1%	91637	MFF-1/2, 10, T-1
R6	0758-0033	1	R: fxd flm, 2 kilohms, 1/4W, 5%	14674	C5 T-O
R7	0683-6835	3	R: fxd comp, 68 kilohms, 1/4W, 5%	01121	CB6835
R8	0686-1035	1	R: fxd comp, 10 kilohms, 1/2W, 5%	01121	EB1035
R9	0683-6835		R: fxd comp, 68 kilohms, 1/4W, 5%	01121	CB6835
R10	0757-0428	1	R: fxd flm, 1620 ohms, 1/8W, 1%	14674	C4 T-O
R11	0757-0317	1	R: fxd flm, 1330 ohms, 1/8W, 1%	14674	C4 T-O
R12	0757-0439	1	R: fxd flm, 6810 ohms, 1/8W, 1%	91637	IMF-1/10-32, T-1
R14	0698-3447	1	R: fxd flm, 422 ohms, 1/8W, 1%	91637	CMF-1/10-32, T-1
R15	0683-5125	1	R: fxd comp, 5100 ohms, 1/4W, 5%	01121	CB5125
R16	0683-6835		R: fxd comp, 68 kilohms, 1/4W, 5%	01121	CB6835
R17	0683-1645	1	R: fxd comp, 160 kilohms, 1/4W, 5%	01121	CB1645
R18	0684-4741	1	R: fxd comp, 470 kilohms, 1/4W, 10%	01121	CB4741
R20	0683-1325	1	R: fxd comp, 1300 ohms, 1/4W, 5%	01121	CB1325
R21	0683-1615	1	R: fxd comp, 160 ohms, 1/4W, 5%	01121	CB1615
R22	0683-1035	2	R: fxd comp, 10 kilohms, 1/4W, 5%	01121	CB1035
R23	0684-4721	1	R: fxd comp, 4700 ohms, 1/4W, 10%	01121	CB4721
R24	0683-1035		R: fxd comp, 10 kilohms, 1/4W, 5%	01121	CB1035
R25	0683-1215	1	R: fxd comp, 120 ohms, 1/4W, 5%	01121	CB1215
R26	0686-5615	1	R: fxd comp, 560 ohms, 1/2W, 5%	01121	EB5651
	09100-91004	1	Cable Ass'y: Internal	-hp-	
	0150-0050	2	C: fxd cer, 1000pf, 600vdcw, +80 −20%	56289	C067B102E102ZE19CDH
	1251-0333	1	Connector-PC: 20 cont, ribbon type	71785	251-10-30-261
	09100-47603	2	Boot Connector: molded polycarbonate	-hp-	
	09100-91006	1	Adaptor: Rear Connector	-hp-	
	0683-7505	2	R: fxd comp, 75 ohms, 1/4W, 5%	01121	CB7505
	0683-5615	2	R: fxd comp, 560 ohms, 1/4W, 5%	01121	CB5615
	1250-0118	3	Connector: RF, Series BNC, bulkhead mount, jack recpt	000LE	28JR128-1
	1251-2048	1	Connector-PC: 44 (2 x 22), ribbon type, green, .125 D	05574	000201-0292
	09100-91007	1	Housing Connector	-hp-	

	REFERENCE DESIGNATOR	-hp- PART NO.		TQ	DESCRIPTION	MFR.	MFR. PART NO.
		09100-91005		1	Cable Ass'y: External X	-hp-	
		1250-0050		2	Clamp Nut: crimp type, RF Conn, silver-P	000LE	NS101-2
		1250-0052		2	Cable plug: crimp type, Series BNC	000LE	28P 117-1
		1250-0089		2	Center Cont: male, series BNC	000LE	C183-1
		8120-0789		10	Cable: RF, 50 ohms, 28 (7x36), AWG, tinned copper, gra	98734	5080-7055
		09100-91009		1	Cable Ass'y: External Y	-hp-	
		1250-0050		2	Clamp Nut: crimp type, RF conn, silver-P	000LE	NS101-2
		1250-0052		2	Cable plug: crimp type, series BNC	000LE	28P 117-1
		1250-0089		2	Center cont: male, series BNC	000LE	C183-1
		8120-0789		10	Cable: RF, 50 ohms, 28 (7x36), AWG, tinned copper, gra	98734	5080-7055
		09100-91008		1	Cable Ass'y: External Z	-hp-	
		1250-0050		2	Clamp Nut: crimp type, RF conn, silver-P	000LE	NS101-2
		1250-0052		2	Cable plug: crimp type, series BNC	000LE	28P 117-1
		1250-0089		2	Center Cont: male, series BNC	000LE	C183-1
		8120-0789		10	Cable: RF, 50 ohms, 28 (7x36), AWG, tinned copper, gra	98734	5080-7055

MANUAL BACKDATING CHANGES

Model MODELS 9100A AND 9100B

Name CALCULATOR

Prefix Serials Prefixed: 945-03675 – 9100A
938-02251 – 9100B

This manual backdating sheet makes this manual applicable to earlier instruments. Instrument-component values that differ from those in the manual, yet are not listed in the backdating sheet, should be replaced using the part number given in the manual.

Instrument Serial Prefix	Make Manual Changes	Instrument Serial Prefix	Make Manual Changes
9100A 816-03110 and below	1		
9100A 945-03500 and below	2 and 1		
9100A 945-03611 and below	3, 2 and 1		
9100B 938-00701 and below	4		
9100B 938-02251 and below	3 and 4		

1. Add the following NOTE:

NOTE

When replacing the Pull Out Instruction Card (the first time only) also replace the instruction card cover, -hp- Part No. 9220-1504; otherwise, curling of the instruction card cover in the instrument will be experienced.

2. Delete the following parts from the Replaceable Parts Lists:

License Plate	7120-1363	1 ea.
Case – Bottom	09100-22005	1 ea.
Bezel – Rear	4040-0729	1 ea.
Power Cable	8120-1348	1 ea.
Power Receptacle –Male	1251-2357	1 ea.
Power Receptacle –Female	1251-2358	1 ea.
Slide Switch 115/230V	3101-1234	1 ea.
Cable Ass'y – Interconnect	09100-61611	1 ea.

Add the following parts to the Replaceable Parts Lists:

License Plate	7120-1302	1 ea.
Case – Bottom	09100-22001	1 ea.
Receptacle	09100-47601	1 ea.
Connector – ac power	1251-1009	1 ea.

2. (Continued)

Slide Switch 115/230V	3101-0033	1 ea.
Power Receptacle Bracket	09100-01206	1 ea.
Power Cable	8120-0078	1 ea.

3. Delete the following part from the Replaceable Parts Lists:

Filter – Line	9100-3137	1 ea.

Add the following part to the 9100A/B Replaceable Parts Lists:

Coil – RF	9100-1344	1 ea.

Revise Figure 23 as follows:

A20 POWER SUPPLY ASSEMBLY 09100-69509

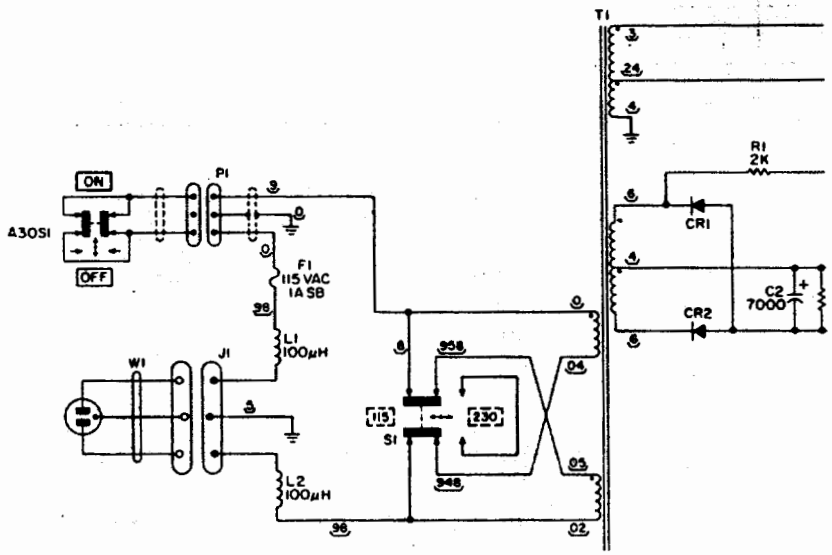

4. Delete the following parts from the Replaceable Parts Lists:

License Plate	7120-1348	1 ea.
Case – Bottom	09100-22005	1 ea.
Bezel – Rear	4040-0729	1 ea.
Power Cable	8120-1348	1 ea.
Power Receptacle –Male	1251-2357	1 ea.
Power Receptacle –Female	1251-2358	1 ea.
Slide Switch 115/230V	3101-1234	1 ea.
Cable Ass'y – Interconnect	09100-61611	1 ea.

4. (Continued)

Add the following parts to the Replaceable Parts Lists:

License Plate	7120-1345	1 ea.
Case – Bottom	09100-22001	1 ea.
Receptacle	09100-47601	1 ea.
Connector – ac power	1251-1009	1 ea.
Slide Switch 115/230V	3101-0033	1 ea.
Power Receptacle Bracket	09100-01206	1 ea.
Power Cable	8120-0078	1 ea.

APPENDIX A

9100A DIAGNOSTIC PROGRAM

The Diagnostic Program exercises every subroutine in the Calculator by program step entry of instructions rather than keyboard entry. Proper operation of the Calculator and the Diagnostic Program is indicated by a flashing display: X = 3., Y = 2.0000, Z = 1.

No data entry is necessary for program operation. To run the program:

SWITCH: POWER ON

RUN

FIXED

RADIANS

PRESS: GO TO ( ) 0 0

Step		Key	Code	Display x	Storage 1	2	3	4	5	6
0	0	arc ▾	72							
	1	hyper ▾	67							
	2	SET FLAG	54							
	3	CLEAR	20							
	4	3	03							
	5	.	21							
	6	1	01							
	7	4	04							
	8	1	01							
	9	5	05							
	a	9	11							
	b	2	02							
	c	6	06							
	d	5	05							
1	0	3	03							
	1	6	06							
	2	0	00							
	3	↑	27							
	4	π	56							
	5	IF x=y	50							
	6	1	01							
	7	9	11							
	8	STOP	41							
	9	√x	76							
	a	y→( )	40							
	b	e	12							
	c	ROLL ↓	31							
	d	√x	76							
2	0	ROLL ↑	22							
	1	×	36							
	2	e	12							
	3	CHG SIGN	32							
	4	+	33							
	5	ENTER EXP	26							
	6	CHG SIGN	32							
	7	9	11							
	8	|y|	55							
	9	IF x>y	53							
	a	2	02							
	b	d	17							
	c	STOP	41							
	d	x⇄y	30							

CLEAR CLEARS arc ▾, hyper ▾ & SET FLAG

TEST DIGIT AND π ENTRY

STOP FOR ERROR OF DIGIT ENTRY, π, IF x=y, ↑, or .

COMPARE $(\sqrt{\pi})^2$ TO π

|y|, CHG SIGN, ENTER EXP, ×, ↑ ROLL,

STOP FOR ERROR OF ROLL ↓, √x, y→( ), IF x>y, e, or +

HEWLETT-PACKARD HEWLETT-PACKARD HEWLETT-PACKARD HEWLETT-PACKARD HEWLETT-PACKARD

Step		Key	Code	Display	Storage
3	0	IF $x<y$	52		
	1	3	03		
	2	4	04		
	3	STOP	41	STOP FOR ERROR OF $(x \rightleftarrows y)$ or $(\text{IF } x<y)$	
	4	.	21		
	5	7	07		
	6	8	10		
	7	↑	27		
	8	7	07	COMPARE .78 AND 78×10^{-1} ENTRIES	
	9	8	10		
	a	ENTER EXP	26		
	b	CHG SIGN	32		
	c	1	01		
	d	—	34		
4	0	IF $x>y$	53		
	1	CLEAR x	37		
	2	ROLL ↑	22		
	3	IF $x=y$	50		
	4	STOP	41	STOP FOR ERROR OF DIGIT ENTRY, (—) or (CLEAR x)	
	5	STOP	41		
	6	IF $x<y$	52		
	7	STOP	41	STOP FOR ERROR OF $(\text{IF } x<y)$	
	8	STOP	41		
	9	↓	25		
	a	IF $x>y$	53		
	b	STOP	41	STOP FOR ERROR OF (↓)	
	c	STOP	41		
	d	IF FLAG	43		
5	0	STOP	41	STOP: CLEAR (STEP 0-3) FAILED TO RESET FLAG OR	
	1	STOP	41	ERROR OF (IF FLAG)	
	2	SET FLAG	54		
	3	π	56		
	4	int x	64		
	5	↑	27		
	6	$y \rightleftarrows (\ )$	24		
	7	e	12		
	8	↓	25		
	9	int x	64		
	a	↑	27		
	b	CLEAR x	37		
	c	e	12		
	d	IF $x=y$	50		

HEWLETT PACKARD

HEWLETT·PACKARD HEWLETT·PACKARD HEWLETT·PACKARD HEWLETT·PACKARD HEWLETT·PACKARD

Step		Key	Code	Display	Storage	
6	0	π	56			
	1	$x \rightleftarrows y$	30			
	2	÷	35			
	3	↓	25			
	4	↑	27			
	5	sin x	70			
	6	x→( )	23			
	7	e	12			
	8	arc ▾	72			
	9	sin x	70			
	a	cos x	73			
	b	x→( )	23			
	c	f	15			
	d	arc ▾	72			
7	0	cos x	73			
	1	tan x	71			
	2	arc ▾	72			
	3	tan x	71			
	4	—	34			
	5	|y|	55			
	6	$x \rightleftarrows y$	30			
	7	↑	27			
	8	ENTER EXP	26			
	9	CHG SIGN	32			
	a	9	11			
	b	IF x<y	52			
	c	STOP	41			
	d	STOP	41			
8	0	3	03			
	1	$x \rightleftarrows y$	30			
	2	3	03			
	3	e^x	74			
	4	ln x	65			
	5	—	34			
	6	ENTER EXP	26			
	7	CHG SIGN	32			
	8	9	11			
	9	|y|	55			
	a	IF x<y	52			
	b	STOP	41			
	c	STOP	41			
	d	3	03			

THESE STEPS CHECK [sin x], [cos x], [tan x], [arc ▾] [sin x], [arc ▾] [cos x], AND [arc ▾] [tan x] FOR X = π/3 RADIANS.

STOP FOR ERROR OF [SET FLAG], [int x], [y⇄ ( )], [arc ▾], [sin x], [cos x], [tan x], [÷], or [f]

THESE STEPS CHECK [e^x] AND [ln x]

STOP FOR ERROR OF [e^x] or [ln x]

Step		Key	Code	Display	Printing
9	0	hyper ▾	67		
	1	sin x	70		
	2	arc ▾	72		
	3	hyper ▾	67		
	4	sin x	70		
	5	hyper ▾	67		
	6	cos x	73		
	7	arc ▾	72		
	8	hyper ▾	67		
	9	cos x	73		
	a	hyper ▾	67		
	b	tan x	71		
	c	arc ▾	72		
	d	hyper ▾	67		
a	0	tan x	71		
	1	log x	75		
	2	x⇄y	30		
	3	1	01		
	4	0	00		
	5	ln x	65		
	6	×	36		
	7	↓	25		
	8	e^x	74		
	9	↑	27		
	a	3	03		
	b	−	34		
	c	|y|	55		
	d	ENTER EXP	26		
b	0	CHG SIGN	32		
	1	9	11		
	2	x⇄y	30		
	3	IF x>y	53		
	4	STOP	41		
	5	STOP	41		
	6	RCL	61		
	7	TO POLAR	62		
	8	ROLL ↓	31		
	9	−	34		
	a	|y|	55		
	b	ENTER EXP	26		
	c	CHG SIGN	32		
	d	9	11		

THESE STEPS CHECK [hyper ▾] [sin x], [hyper ▾] [cos x], [hyper ▾] [tan x],
[arc ▾] [hyper ▾] [sin x], [arc ▾] [hyper ▾] [cos x],
AND [arc ▾] [hyper ▾] [tan x] FOR X = 3.

THESE STEPS CHECK [log x]

STOP FOR ERROR OF [hyper ▾] or [log x]

HEWLETT-PACKARD

Step	Key	Code	Display	Storage
c 0	IF x<y	52		
1	STOP	41	STOP FOR ERROR OF (TO POLAR) or (RCL)	
2	STOP	41		
3	π	56		
4	x⇄y	30		
5	3	03		
6	÷	35		
7	↓	25		
8	x⇄y	30		
9	TO RECT	66		
a	ACC −	63		
b	+	33		
c	↓	25		
d	int x	64		
d 0	↑	27		
1	2	02		
2	ACC +	60		
3	x⇄y	30		
4	RCL	61		
5	↑	27		
6	3	03		
7	PAUSE	57	DOES NOT DISPLAY 1. 2.0000 3. ; ERROR OF (ACC +), (ACC −), (PAUSE) or (TO RECT)	
8	PAUSE	57		
9	PAUSE	57		
a	GO TO( )( )	44		
b	0	00		
c	0	00		
d	END	46		
0				
1				
2				
3				
4				
5				
6				
7				
8				
9				
a				
b				
c				
d				

APPENDIX B

9100B DIAGNOSTIC PROGRAM

This program exercises every calculator operation to verify that the calculator is functioning correctly.

SWITCH: RUN RADIANS FLOATING

PRESS: END

ENTER PROGRAM: Side A

SWITCH: PROGRAM

DISPLAY: -0.0 XX → z*

SWITCH: RUN

ENTER PROGRAM: Side B

SWITCH: PROGRAM

DISPLAY: 0.0 20 → z*

SWITCH: RUN

PRESS: CONT

CORRECT DISPLAY FLASHING

```
-- ---------- → z
n nnnnnnnnn nn → y
-- ---------- → x
```

n = 0, 1, 2 . . . 9; CYCLIC

*XX indicates any two digits. The program counter's location (−0.0 and 0.0) must be correct. An incorrect location indicates a defective magnetic card reader assembly or magnetic program card. Use the substitution troubleshooting technique to determine which is at fault.

Step	Key	Code	Display
0 0	CLEAR	20	
(+) 1	IF x=y	50	
2	0	00	
3	5	05	
4	STOP	41	
5	IF FLAG	43	
6	STOP	41	
7	STOP	41	
8	SET FLAG	54	
9	IF FLAG	43	
a	0	00	
b	d	17	
c	STOP	41	
d	IF FLAG	43	
1 0	STOP	41	
(+) 1	STOP	41	
2	3	03	
3	•	21	
4	1	01	
5	4	04	
6	1	01	
7	5	05	
8	9	11	
9	2	02	
a	6	06	
b	5	05	
c	3	03	
d	6	06	
2 0	0	00	
(+) 1	↑	27	
2	π	56	
3	IF x=y	50	
4	2	02	
5	7	07	
6	STOP	41	
7	√x	76	
8	y↔( )	40	
9	e	12	
a	ROLL ↓	31	
b	√x	76	
c	ROLL ↑	22	
d	×	36	
3 0	e	12	
(+) 1	CHG SIGN	32	
2	+	33	
3	a	13	
4	|y|	55	
5	IF x>y	53	
6	3	03	
7	9	11	
8	STOP	41	
9	x⇄y	30	
a	IF x<y	52	
b	4	04	
c	0	00	
d	STOP	41	
4 0	•	21	
(+) 1	7	07	
2	8	10	
3	↑	27	
4	7	07	
5	8	10	
6	ENTER EXP	26	
7	CHG SIGN	32	
8	1	01	
9	−	34	
a	IF x>y	53	
b	CLEAR x	37	
c	ROLL ↑	22	
d	IF x=y	50	
5 0	STOP	41	
(+) 1	STOP	41	
2	IF x<y	52	
3	STOP	41	
4	STOP	41	
5	↓	25	
6	IF x>y	53	
7	STOP	41	
8	STOP	41	
9	π	56	
a	int x	64	
b	↑	27	
c	y⇄( )	24	
d	e	12	
6 0	↓	25	
(+) 1	int x	64	
2	↑	27	
3	CLEAR x	37	
4	x↔( )	67	
5	e	12	
6	IF x=y	50	
7	CLEAR x	37	
8	3	03	
9	IF x=y	50	
a	6	06	
b	d	17	
c	STOP	41	
d	π	56	
7 0	x⇄y	30	
(+) 1	÷	35	
2	×	36	
3	π	56	
4	IF x=y	50	
5	7	07	
6	8	10	
7	STOP	41	
8	CLEAR	20	
9	π	56	
a	↑	27	
b	+	33	
c	ACC +	60	
d	ACC +	60	

Storage

f	e
e	
d	
c	b
b	a
a	9
9	8
8	7
7	6
6	5
5	4
4	3
3	2
2	1
1	0
0	

HEWLETT-PACKARD

HEWLETT·PACKARD

Step	Key	Code	Display
8 0	ACC −	63	
(+) 1	ACC +	60	
2	RCL	61	
3	↑	27	
4	π	56	
5	−	34	
6	↓	25	
7	−	34	
8	−	34	
9	−	34	
a	IF x=y	50	
b	b	14	
c	8	10	
d	STOP	41	
9 0	sin x	70	
(+) 1	arc ▾	72	
2	sin x	70	
3	cos x	73	
4	arc ▾	72	
5	cos x	73	
6	tan x	71	
7	arc ▾	72	
8	tan x	71	
9	GO TO ( )	44	
a	▲SUB▾	77	
b	b	14	
c	0	00	
d	RETURN	77	
a 0	0	00	
(+) 1	0	00	
2	0	00	
3	0	00	
4	0	00	
5	0	00	
6	0	00	
7	0	00	
8	0	00	
9	1	01	
a	9	11	
b	CLEAR	20	
c	0	00	
d	0	00	

HEWLETT·PACKARD

Step	Key	Code	Display
b 0	−	34	
(+) 1	|y|	55	
2	a	13	
3	IF x<y	52	
4	SET FLAG	54	
5	x→( )	23	
6	RETURN	77	
7	STOP	41	
8	3	03	
9	÷	35	
a	↓	25	
b	↑	27	
c	x→( )	23	
d	−	34	
c 0	e	12	
(+) 1	GO TO ( )	44	
2	▲SUB▾	77	
3	9	11	
4	0	00	
5	IF FLAG	43	
6	STOP	41	
7	STOP	41	
8	x←( )	67	
9	−	34	
a	e	12	
b	↑	27	
c	GO TO ( )	44	
d	▲SUB▾	77	
d 0	−	34	
(+) 1	b	14	
2	a	13	
3	IF FLAG	43	
4	STOP	41	
5	STOP	41	
6	y⇄( )	24	
7	−	34	
8	e	12	
9	↓	25	
a	↑	27	
b	SET FLAG	54	
c	GO TO ( )	44	
d	▲SUB▾	77	

HEWLETT·PACKARD

Step	Key	Code	Display
0 0	−	34	
(−) 1	8	10	
2	6	06	
3	−	34	
4	|y|	55	
5	a	13	
6	IF x<y	52	
7	STOP	41	
8	STOP	41	
9	GO TO ( )	44	
a	▲SUB▾	77	
b	3	03	
c	3	03	
d	CLEAR	20	
1 0	SET FLAG	54	
(−) 1	e	12	
2	f	15	
3	y→( )	40	
4	−	34	
5	f	15	
6	y⇄( )	24	
7	−	34	
8	f	15	
9	ACC +	60	
a	ACC +	60	
b	ACC −	63	
c	RCL	61	
d	0	00	

Storage
f
e
d
c
b
a
9
8
7
6
5
4
3
2
1
0

HEWLETT·PACKARD

Step	Key	Code	Display X	Display Y	Display Z
20	0	00			
(-)21	0	00			
22	0	00			
23	0	00			
24	0	00			
25	0	00			
26	0	00			
27	0	00			
28	0	00			
29	IF x=y	50			
2a	2	02			
2b	d	17			
2c	STOP	41			
2d	GO TO ( )	44			
30	+	33			
(-)31	0	00			
32	0	00			
33	CLEAR	20			
34	ENTER EXP	26			
35	1	01			
36	2	02			
37	x→( )	23			
38	f	15			
39	1	01			
3a	↑	27			
3b	GO TO ( )	44			
3c	▲SUB▼	77			
3d	8	10			
40	6	06			
(-)41	RCL	61			
42	CLEAR x	37			
43	IF x=y	50			
44	7	07			
45	a	13			
46	9	11			
47	IF x=y	50			
48	7	07			
49	3	03			
4a	RCL	61			
4b	x⇄y	30			
4c	↑	27			
4d	↓	25			

HEWLETT·PACKARD

Step	Key	Code	Display X	Display Y	Display Z
50	÷	35			
(-)51	↓	25			
52	+	33			
53	ENTER EXP	26			
54	1	01			
55	1	01			
56	×	36			
57	1	01			
58	x⇄y	30			
59	ACC +	60			
5a	x→( )	23			
5b	f	15			
5c	↓	25			
5d	9	11			
60	GO TO ( )	44			
(-)61	▲SUB▼	77			
62	b	14			
63	0	00			
64	RCL	61			
65	•	21			
66	1	01			
67	×	36			
68	↓	25			
69	↑	27			
6a	GO TO ( )	44			
6b	3	03			
6c	b	14			
6d	STOP	41			
70	STOP	41			
(-)71	STOP	41			
72	STOP	41			
73	RCL	61			
74	↑	27			
75	GO TO ( )	44			
76	▲SUB▼	77			
77	b	14			
78	1	01			
79	RETURN	77			
7a	1	01			
7b	x→( )	23			
7c	e	12			
7d	GO TO ( )	44			

HEWLETT·PACKARD

Step	Key	Code	Display X	Display Y	Display Z
80	▲SUB▼	77			
(-)81	b	14			
82	0	00			
83	GO TO ( )	44			
84	3	03			
85	b	14			
86	TO POLAR	62			
87	TO RECT	66			
88	e^x	74			
89	log x	75			
8a	↑	27			
8b	ENTER EXP	26			
8c	1	01			
8d	ln x	65			
90	×	36			
(-)91	↓	25			
92	IF FLAG	43			
93	x←( )	67			
94	RETURN	77			
95	SET FLAG	54			
96	GO TO ( )	44			
97	▲SUB▼	77			
98	b	14			
99	a	13			
9a	IF FLAG	43			
9b	STOP	41			
9c	STOP	41			
9d	RETURN	77			

Storage

f	
e	
d	
c	
b	
a	
9	
8	
7	
6	
5	
4	
3	
2	
1	
0	

PART NO. 09100-76501 9100B ONLY

Step	Key	Code	Display x	Display y	Display z	Step	Key	Code	Display x	Display y	Display z	Step	Key	Code	Display x	Display y	Display z
a 0	CHG SIGN	32				d 0	GO TO ( )	44				0					
(−) 1	CHG SIGN	32				(−) 1	▲SUB▼	77				1					
2	CHG SIGN	32				2	+	33				2					
3	CHG SIGN	32				3	b	14				3					
4	CHG SIGN	32				4	0	00				4					
5	CHG SIGN	32				5	RETURN	77				5					
6	CHG SIGN	32				6	GO TO ( )	44				6					
7	CHG SIGN	32				7	▲SUB▼	77				7					
8	CHG SIGN	32				8	+	33				8					
9	CHG SIGN	32				9	9	11				9					
a	CHG SIGN	32				a	0	00				a					
b	CHG SIGN	32				b	RETURN	77				b					
c	CHG SIGN	32				c	END	46				c					
d	CHG SIGN	32				d						d					
b 0	÷	35				0						0					
(−) 1	x←( )	67				1						1					
2	−	34				2						2					
3	a	13				3						3					
4	↑	27				4						4					
5	ROLL ↓	31				5						5					
6	PAUSE	57				6						6					
7	PAUSE	57				7						7					
8	PAUSE	57				8						8					
9	RETURN	77				9						9					
a	hyper ▾	67				a						a					
b	sin x	70				b						b					
c	arc ▾	72				c						c					
d	hyper ▾	67				d						d					
c 0	sin x	70				0						Storage					
(−) 1	hyper ▾	67				1						f					
2	cos x	73				2						e					
3	arc ▾	72				3						d					
4	hyper ▾	67				4						c					
5	cos x	73				5						b					
6	hyper ▾	67				6						a					
7	tan x	71				7						9					
8	arc ▾	72				8						8					
9	hyper ▾	67				9						7					
a	tan x	71				a						6					
b	IF FLAG	43				b						5					
c	d	17				c						4					
d	6	06				d						3					
												2					
												1					
												0					

HEWLETT-PACKARD

APPENDIX C

CODE LIST OF MANUFACTURERS

The following code numbers are from the Federal Supply Code for Manufacturers Cataloging Handbooks H4-1 (Name to Code) and H4-2 (Code to Name) and their latest supplements. The date of revision and the date of the supplements used appear at the bottom of each page. Alphabetical codes have been arbitrarily assigned to suppliers not appearing in the H4 Handbooks.

Code No.	Manufacturer	Address
00000	U.S.A Common	Any supplier of U.S.
00136	McCoy Electronics	Mount Holly Springs, Pa.
00213	Sage Electronics Corp.	Rochester, N.Y.
00287	Cemco, Inc.	Danielson, Conn.
00334	Humidial	Colton, Calif.
00348	Mictron, Co., Inc.	Valley Stream, N.Y.
00373	Garlock Inc.	Cherry Hill, N.J.
00656	Aerovox Corp.	New Bedford, Mass.
00779	Amp. Inc.	Harrisburg, Pa.
00781	Aircraft Radio Corp.	Boonton, N.J.
00809	Croven, Ltd.	Whitby, Ontario, Canada
00815	Northern Engineering Laboratories, Inc.	Burlington, Wis.
00853	Sangamo Electric Co., Pickens Div.	Pickens, S.C.
00866	Goe Engineering Co.	City of Industry, Cal.
00891	Carl E. Holmes Corp.	Los Angeles, Cal.
00929	Microlab Inc.	Livingston, N.J.
01002	General Electric Co., Capacitor Dept.	Hudson Falls, N.Y.
01009	Alden Products Co.	Brockton, Mass.
01121	Allen Bradley Co.	Milwaukee, Wis.
01255	Litton Industries, Inc.	Beverly Hills, Cal.
01281	TRW Semiconductors, Inc.	Lawndale, Cal.
01295	Texas Instruments, Inc., Transistor Products Div.	Dallas, Texas
01349	The Alliance Mfg. Co	Alliance, Ohio
01538	Small Parts Inc.	Los Angeles, Cal.
01589	Pacific Relays, Inc.	Van Nuys, Cal.
01670	Gudebrod Bros. Silk Co.	New York, N.Y.
01930	Amerock Corp.	Rockford, Ill.
01960	Pulse Engineering Co	Santa Clara, Cal.
02114	Ferroxcube Corp. of America	Saugerties, N.Y.
02116	Wheelock Signals, Inc.	Long Branch, N.J.
02286	Cole Rubber and Plastics Inc	Sunnyvale, Cal.
02660	Amphenol-Borg Electronics Corp.	Broadview, Ill.
02735	Radio Corp. of America, Semiconductor and Materials Division	Somerville, N.J.
02771	Vocaline Co. of America, Inc.	Old Saybrook, Conn.
02777	Hopkins EngineeringCo.	San Fernando, Cal.
02875	Hudson Tool & Die	Newark, N.J.
03296	Nylon Molding Corp.	Springfield, N.J.
03508	G.E. Semiconductor Prod. Dept.	Syracuse, N.Y.
03705	Apex Machine & Tool Co.	Dayton, Ohio
03797	Eldema Corp.	Compton, Calif.
03818	Parker Seal Co.	Los Angeles, Cal.
03877	Transitron Electric Corp.	Wakefield, Mass.
03888	Pyrofilm Resistor Co., Inc.	Cedar Knolls, N.J.
03954	Singer Co., Diehl Div., Finderne Plant	Sumerville, N.J.
04009	Arrow, Hart and Hegeman Elect. Co.	Hartford, Conn.
04013	Taruus Corp.	Lambertville, N.J.
04062	Arco Electronic Inc.	Great Neck, N.Y.
04217	Essex Wire	Los Angeles, Cal.
04222	Hi-Q Division of Aerovox	Myrtle Beach, S.C.
04354	Precision Paper Tube Co.	Wheeling, Ill.
04404	Palo Alto Division of Hewlett-Packard Co.	Palo Alto, Cal.
04651	Sylvania Electric Products, Microwave Device Div.	Mountain View, Cal.
04673	Dakota Engr. Inc.	Culver City, Cal.
04713	Motorola Inc. Semiconductor Prod. Div.	Phoenix, Arizona
04732	Filtron Co., Inc. Western Div.	Culver City, Cal.
04773	Automatic Electric Co.	Northlake, Ill.
04796	Sequoia Wire Co.	Redwood City, Cal.
04811	Precision Coil Spring Co.	El Monte, Cal.
04870	P.M. Motor Company	Westchester, Ill.
04919	Component Mfg. Service Co.	W. Bridgewater, Mass.
05006	Twentieth Century Plastics, Inc.	Los Angeles, Cal.
05277	Westinghouse Electric Corp. Semiconductor Dept.	Youngwood, Pa.
05347	Ultronix, Inc.	San Mateo, Cal.
05397	Union Carbine Corp., Elect. Div.	New York, N.Y.
05574	Viking Ind. Inc.	Canoga Park, Cal.
05593	Icore Electro-Plastics Inc.	Sunnyvale, Cal.
05616	Cosmo Plastic (c/o Electrical Spec. Co.)	Cleveland, Ohio
05624	Barber Colman Co.	Rockford, Ill.
05726	Tiffen Optical Co.	Roslyn Heights, Long Island, N.Y.
05729	Metro-Tel Corp.	Westbury, N.Y.
05783	Stewart Engineering Co.	Santa Cruz, Cal.
05820	Wakefield Engineering Inc.	Wakefield, Mass.
06004	Bassick Co., Div. of Stewart Warner Corp.	Bridgeport, Conn.
06090	Raychem Corp.	Redwood City, Cal.
06175	Bausch and Lomb Optical Co.	Rochester, N.Y.
06402	E.T.A. Products Co. of America	Chicago, Ill.
06540	Amatom Electronic Hardware Co., Inc.	New Rochelle, N.Y.
06555	Beede Electrical Instrument Co., Inc.	Penacook, N.H.
06666	General Devices Co., Inc.	Indianapolis, Ind.
06751	Components Inc., Ariz. Div.	Phoenix, Arizona
06812	Torrington Mfg. Co., West Div.	Van Nuys, Cal.
06980	Varian Assoc. Etmac Div.	San Carlos, Cal.
07088	Kelvin Electric Co.	Van Nuys, Cal.
07126	Digitran Co.	Pasadena, Cal.
07137	Transistor Electronics Corp.	Minneapolis, Minn.
07138	Westinghouse Electric Corp., Electronic Tube Div.	Elmira, N.Y.
07149	Filmohm Corp.	New York, N.Y.
07233	Cinch-Graphik Co.	City of Industry, Cal.
07256	Silicon Transistor Corp.	Carle Place, N.Y.
07261	Avnet Corp.	Culver City, Cal.
07263	Fairchild Camera & Inst. Corp., Semiconductor Div.	Mountain View, Cal.
07322	Minnesota Rubber Co.	Minneapolis, Minn.
07387	Birtcher Corp, The	Monterey Park, Cal.
07397	Sylvania Elect. Prod. Inc., Mt. View Operations	Mountain View, Cal.
07700	Technical Wire Products Inc.	Cranford, N.J.
07829	Bodine Elect. Co.	Chicago, Ill.
07910	Continental Device Corp.	Hawthorne, Cal.
07933	Raytheon Mfg. Co., Semiconductor Div.	Mountain View, Cal.
07980	Hewlett-Packard Co., New Jersey Division	Rockaway, N.J.
08145	U.S. Engineering Co.	Los Angeles, Cal.
08289	Blinn, Delbert Co.	Pomona, Cal.
08358	Burgess Battery Co.	Niagara Falls, Ontario, Canada
08524	Deutsch Fastener Corp.	Los Angeles, Cal.
08664	Bristol Co., The	Waterbury, Conn.
08717	Sloan Company	Sun Valley, Cal.
08718	ITT Cannon Electric Inc., Phoenix Div.	Phoenix, Arizona
08727	National Radio Lab. Inc.	Paramus, N.J.
08792	CBS Electronics Semiconductor Operations. Div. of CBS Inc	Lowell, Mass.
08806	General Electric Co., Miniature Lamp Dept.	Cleveland, Ohio
08984	Mel-Rain	Indianapolis, Ind.
09028	Babcock Relays Div.	Costa Mesa, Cal.
09097	Electronic Enclosures Inc.	Los Angeles, Calif.
09134	Texas Capacitor Co.	Houston, Texas
09145	Tech. Ind. Inc. Atohm Elect.	Burbank, Cal.
09250	Electro Assemblies, Inc.	Chicago, Ill.
09353	C & K Components Inc.	Newton, Mass.
09569	Mallory Battery Co. of Canada, Ltd.	Toronto, Ontario, Canada
09795	Pennsylvania Florocarbon. Clifton Heights, Penn.	
09922	Burndy Corp.	Norwalk, Conn.
10214	General Transistor Western Corp.	Los Angeles, Cal.
10411	Ti-Tal, Inc.	Berkeley, Cal.
10646	Carborundum Co.	Niagara Falls, N.Y.
11236	CTS of Berne, Inc.	Berne, Ind.
11237	Chicago Telephone of California, Inc.	So. Pasadena, Cal.
11242	Bay State Electronics Corp.	Waltham, Mass.
11312	Teledyne Inc., Microwave Div.	Palo Alto, Cal.
11314	National Seal	Downey, Cal.
11453	Precision Connector Corp.	Jamaica, N.Y.
11534	Duncan Electronics Inc.	Costa Mesa, Cal.
11711	General Instrument Corp., Semiconductor Division Products Group	Newark, N.J.
11717	Imperial Electronic, Inc.	Buena Park, Cal.
11870	Melabs, Inc.	Palo Alto, Cal.
12136	Philadelphia Handle Co.	Camden, N.J.
12361	Grove Mfg. Co., Inc.	Shady Grove, Pa.
12574	Gulton Ind. Inc., Data System Div.	Albuquerque, N.M.
12697	Clarostat Mfg. Co.	Dover, N.H.
12728	Elmar Filter Corp	W. Haven, Conn.
12859	Nippon Electric Co., Ltd.	Tokyo, Japan
12881	Metex Electronics Corp.	Clark, N.J.
12930	Delta Semiconductor Inc.	Newport Beach, Cal.
12954	Dickson Electronics Corp.	Scottsdale, Arizona
13019	Airco Supply Co., Inc.	Witchita, Kansas
13061	Wilco Products	Detroit, Mich.
13103	Thermolloy	Dallas, Texas
13327	Solitron Devices Inc.	Tappan, N.Y.
13396	Telefunken (GmbH)	Hanover, Germany
13835	Midland-Wright Div. of Pacific Industries, Inc.	Kansas City, Kansas
14099	Sem-Tech	Newbury Park, Cal.
14193	Calif. Resistor Corp	Santa Monica, Cal.
14298	American Components, Inc.	Conshohocken, Pa.
14433	ITT Semiconductor, a Div. of Int. Telephone and Telegraph Corporation	West Palm Beach, Fla.
14493	Hewlett-Packard Company	Loveland, Colo.
14655	Cornell Dublier Electric Corp	Newark, N.J.
14674	Corning Glass Works	Corning, N.Y.
14752	Electro Cube Inc.	San Gabriel, Cal.
14960	Williams Mfg. Co.	San Jose, Cal.
15106	The Sphere Co., Inc.	Little Falls, N.J.
15203	Webster Electronics Co.	New York, N.Y.
15287	Scionics Corp.	Northridge, Cal.
15291	Adjustable Bushing Co.	N. Hollywood, Cal.
15558	Micron Electronics. Garden City, Long Island, N.Y.	
15568	Amprobe Inst. Corp.	Lynbrook, N.Y.
15631	Cabletronics	Costa Mesa, Cal.
15772	Twentieth Century Coil Spring Co.	Santa Clara, Cal.
15801	Fenwal Elect. Inc.	Framingham, Mass.
15818	Amelco Inc.	Mountain View, Cal.
16037	Spruce Pine Mica Co.	Spruce Pine, N.C.
16179	Omni-Spectra Inc.	Detroit, Ill.
16352	Computer Diode Corp.	Lodi, N.J.
16554	Electroid Co.	Union, N.J.
16585	Boots Aircraft Nut Corp.	Pasadena, Cal.
16688	Ideal Prec. Meter Co., Inc., De Jur Meter Div.	Brooklyn, N.Y.
16758	Delco Radio Div. of G.M. Corp.	Kokomo, Ind.
17109	Thermonetics Inc	Canoga Park, Cal.
17474	Tranex Company	Mountain View, Cal.
17675	Hamlin Metal Products Corp.	Akron, Ohio
17745	Angstrohm Prec. Inc.	No. Hollywood, Cal.
17856	Siliconix inc.	Sunnyvale, Cal.
17870	McGraw-Edison Co.	Manchester, N.H.
18042	Power Design Pacific Inc.	Palo Alto, Cal.
18083	Clevite Corp. Semiconductor Div.	Palo Alto, Cal.
18324	Signetics Corp.	Sunnyvale, Cal.
18476	Ty-Car Mfg. Co., Inc.	Holliston, Mass.
18486	TRW Elect. Comp. Div.	Des Plaines, Ill.
18565	Chomerics	Plainville, Mass.
18583	Curtis Instrument, Inc.	Mt. Kisco, N.Y.
18612	Vishay Instruments Inc.	Malvern, Pa.
18873	E.I. DuPont and Co., Inc.	Wilmington, Del.
18911	Durant Mfg. Co.	Milwaukee, Wis.
19315	The Bendix Corp., Navigation & Control Div.	Teterboro, N.J.
19500	Thomas A. Edison Industries, Div. of McGraw-Edison	West Orange, N.J.
19589	Concoa	Baldwin Park, Cal.

From: Handbook Supplements
H4-1 Dated January 1970

APPENDIX C

CODE LIST OF MANUFACTURERS (Continued)

Code No.	Manufacturer	Address
19644	LRC Electronics	Horseheads, N.Y.
19701	Electra Mfg. Co.	Independence, Kansas
20183	General Atronics Corp.	Philadelphia, Pa.
21226	Executone, Inc.	Long Island City, N.Y.
21355	Fafnir Bearing Co., The	New Britian, Conn.
21520	Fansteel Metallurgical Corp.	N. Chicago, Ill.
23020	General Reed Co.	Metuchen, N.J.
23042	Texscan Corp.	Indianapolis, Ind.
23783	British Radio Electronics Ltd.	Washington, D.C.
24455	G.E. Lamp Division, Nela Park,	Cleveland, Ohio
24655	General Radio Co.	West Concord, Mass.
24681	Memcor Inc., Comp. Div.	Huntington, Ind.
26365	Gries Reproducer Corp.	New Rochelle, N.Y.
26462	Grobert File Co. of America, Inc.	Carlstadt, N.J.
26851	Compac/Hollister Co.	Hollister, Cal.
26992	Hamilton Watch Co.	Lancaster, Pa.
28480	Hewlett-Packard Co.	Palo Alto, Cal.
28520	Heyman Mfg. Co.	Kenilworth, N.J.
30817	Instrument Specialties Co., Inc.	Little Falls, N.J.
33173	G.E. Receiving Tube Dept.	Owensboro, Ky.
35434	Lectrohm Inc.	Chicago, Ill.
36196	Stanwyck Coil Products, Ltd.	Hawkesbury, Ontario, Canada
36287	Cunningham, W.H. & Hill, Ltd.	Toronto, Ontario, Canada
37942	P.R. Mallory & Co., Inc.	Indianapolis, Ind.
39543	Mechanical Industries Prod. Co.	Akron, Ohio
40920	Miniature Precision Bearings, Inc.	Keene, N.H.
40931	Honeywell Inc.	Minneapolis, Minn.
42190	Muter Co.	Chicago, Ill.
43990	C.A. Norgren Co.	Englewood, Colo.
44655	Ohmite Mfg. Co.	Skokie, Ill.
46384	Penn Eng. & Mfg. Corp.	Doylestown, Pa.
47904	Polaroid Corp.	Cambridge, Mass.
48620	Precision Thermometer & Inst. Co.	Southampton, Pa.
49956	Microwave & Power Tube Div.	Waltham, Mass.
52090	Rowan Controller Co.	Westminster, Md.
52983	HP Co., Med. Elec. Div.	Waltham, Mass.
54294	Shallcross Mfg. Co.	Selma, N.C.
55026	Simpson Electric Co.	Chicago, Ill.
55933	Sonotone Corp.	Elmsford, N.Y.
55938	Raytheon Co. Commercial Apparatus & System Div.	So. Norwalk, Conn.
56137	Spaulding Fibre Co., Inc.	Tonawanda, N.Y.
58289	Sprague Electric Co.	North Adams, Mass.
58474	Superior Elect. Co.	Bristol, Conn.
59446	Telex Corp.	Tulsa, Okla.
59730	Thomas & Betts Co.	Elizabeth, N.J.
60741	Triplett Electrical Inst. Co.	Bluffton, Ohio
61775	Union Switch and Signal Div. of Westinghouse Air Brake Co.	Pittsburgh, Pa.
62119	Universal Electric Co.	Owosso, Mich.
63743	Ward-Leonard Electric Co.	Mt. Vernon, N.Y.
64959	Western Electric Co., Inc.	New York, N.Y.
65092	Weston Inst. Inc. Weston-Newark.	Newark, N.J.
66295	Wittek Mfg. Co.	Chicago, Ill.
66346	Minnesota Mining & Mfg. Co. Revere Mincom Div.	St. Paul, Minn.
70276	Allen Mfg. Co.	Hartford, Conn.
70309	Allied Control	New York, N.Y.
70318	Allmetal Screw Product Co., Inc.	Garden City, N.Y.
70417	Amplex, Div. of Chrysler Corp.	Detroit, Mich.
70485	Atlantic India Rubber Works, Inc.	Chicago, Ill.
70563	Amperite Co., Inc.	Union City, N.J.
70674	ADC Products Inc.	Minneapolis, Minn.
70903	Belden Mfg. Co.	Chicago, Ill.
70998	Bird Electric Corp.	Cleveland, Ohio
71002	Birnbach Radio Co.	New York, N.Y.
71034	Bliley Electric Co., Inc.	Erie, Pa.
71041	Boston Gear Works Div. of Murray Co. of Texas	Quincey, Mass.
71218	Bud Radio, Inc.	Willoughby, Ohio
71279	Cambridge Thermionics Corp.	Cambridge, Mass.
71286	Camloc Fastener Corp.	Paramus, N.J.
71313	Cardwell Condenser Corp.	Lindenhurst, L.I., N.Y.
71400	Bussmann Mfg. Div. of McGraw-Edison Co.	St. Louis, Mo.
71438	Chicago Condenser Corp.	Chicago, Ill.
71447	Calif. Spring Co., Inc.	Pico-Rivera, Cal.
71450	CTS Corp.	Elkhart, Ind.
71468	ITT Cannon Electric Inc.	Los Angeles, Cal.
71471	Cinema, Div. Aerovox Corp.	Burbank, Cal.
71482	C.P. Clare & Co.	Chicago, Ill.
71590	Centralab Div. of Globe Union Inc.	Milwaukee, Wis.
71616	Commercial Plastics Co.	Chicago, Ill.
71700	Cornish Wire Co., The	New York, N.Y.
71707	Coto Coil Co., Inc.	Providence, R.I.
71744	Chicago Miniature Lamp Works	Chicago, Ill.
71785	Cinch Mfg. Co., Howard B. Jones Div.	Chicago, Ill.
71984	Dow Corning Corp.	Midland, Mich.
72136	Electro Motive Mfg. Co., Inc.	Willimantic, Conn.
72619	Dialight Corp.	Brooklyn, N.Y.
72656	Indiana General Corp., Electronics Div.	Keasby, N.J.
72699	General Instrument Corp., Cap Division	Newark, N.J.
72765	Drake Mfg. Co.	Harwood Heights, Ill.
72825	Hugh H. Eby Inc.	Philadelphia, Pa.
72928	Gudeman Co.	Chicago, Ill.
72962	Elastic Stop Nut Corp.	Union, N.J.
72964	Robert M. Hadley Co.	Los Angeles, Cal.
72982	Erie Technological Products, Inc.	Erie, Pa.
73061	Hansen Mfg. Co., Inc.	Princeton, Ind.
73076	H.M. Harper Co.	Chicago, Ill.
73138	Helipot Div. of Beckman Inst., Inc.	Fullerton, Cal.
73293	Hughes Products Division of Hughes Aircraft Co.	Newport Beach, Cal.
73445	Amperex Elect. Co.	Hicksville, L.I., N.Y.
73506	Bradley Semiconductor Corp.	New Haven, Conn.
73559	Carling Electric, Inc.	Hartford, Conn.
73586	Circle F Mfg. Co.	Trenton, N.J.
73682	George K. Garrett Co., Div. MSL Industries, Inc.	Philadelphia, Pa.
73734	Federal Screw Products, Inc.	Chicago, Ill.
73743	Fischer Special Mfg. Co.	Cincinnati, Ohio
73793	General Industries Co., The	Elyria, Ohio
73846	Goshen Stamping & Tool Co.	Goshen, Ind.
73899	JFD Electronics Corp.	Brooklyn, N.Y.
73905	Jennings Radio Mfg. Corp.	San Jose, Cal.
73957	Groove-Pin Corp.	Ridgefield, N.J.
74276	Signalite Inc.	Neptune, N.J.
74455	J.H. Winns, and Sons	Winchester, Mass.
74861	Industrial Condenser Corp.	Chicago, Ill.
74868	R.F. Products Division of Amphenol-Borg Electronic Corp.	Danbury, Conn.
74970	E.F. Johnson Co.	Waseca, Minn.
75042	International Resistance Co.	Philadelphia, Pa.
75263	Keystone Carbon Co., Inc.	St. Marys, Pa.
75378	CTS Knights, Inc.	Sandwich, Ill.
75382	Kulka Electric Corp.	Mt. Vernon, N.Y.
75818	Lenz Electric Mfg. Co.	Chicago, Ill.
75915	Littlefuse, Inc.	Des Plaines, Ill.
76005	Lord Mfg. Co.	Erie, Pa.
76210	C.W. Marwedel	San Francisco, Cal.
76433	General Instrument Corp., Micamold Division	Newark, N.J.
76487	James Millen Mfg. Co., Inc.	Malden, Mass.
76493	J.W. Miller Co.	Los Angeles, Cal.
76530	Cinch-Monadnock, Div. of United Carr Fastener Corp.	San Leandro, Cal.
76545	Mueller Electric Co.	Cleveland, Ohio
76703	National Union	Newark, N.J.
76854	Oak Manufacturing Co.	Crystal Lake, Ill.
77068	The Bendix Corp., Electrodynamics Div.	N. Hollywood, Cal.
77075	Pacific Metals Co.	San Francisco, Cal.
77221	Phaostron Instrument and Electronic Co.	So. Pasadena, Cal.
77252	Philadelphia Steel and Wire Corp.	Philadelphia, Pa.
77342	American Machine & Foundry Co. Potter & Brumfield Div.	Princeton, Ind.
77630	TRW Electronic Components Div.	Camden, N.J.
77638	General Instrument Corp., Rectifier Division	Brooklyn, N.Y.
77764	Resistance Products Co.	Harrisburg, Pa.
77969	Rubbercraft Corp. of Calif.	Torrance, Cal.
78189	Shakeproof Division of Illinois Tool Works	Elgin, Ill.
78277	Sigma	So. Braintree, Mass.
78283	Signal Indicator Corp.	New York, N.Y.
78290	Struthers-Dunn Inc.	Pitman, N.J.
78452	Thompson-Bremer & Co.	Chicago, Ill.
78471	Tilley Mfg. Co.	San Francisco, Cal.
78488	Stackpole Carbon Co.	St. Marys, Pa.
78493	Standard Thomson Corp.	Waltham, Mass.
78553	Tinnerman Products, Inc.	Cleveland, Ohio
78790	Transformer Engineers	San Gabriel, Cal.
78947	Ucinite Co.	Newtonville, Mass.
79136	Waldes Kohinoor Inc.	Long Island City, N.Y.
79142	Veeder Root, Inc.	Hartford, Conn.
79251	Wenco Mfg. Co.	Chicago, Ill.
79727	Continental-Wirt Electronics Corp.	Philadelphia, Pa.
79963	Zierick Mfg. Corp.	New Rochelle, N.Y.
80031	Mepco Division of Sessions Clock Co.	Morristown, N.J.
80033	Prestole Corp.	Toledo, Ohio
80120	Schnitzer Alloy Products Co.	Elizabeth, N.J.
80131	Electronic Industries Association. Standard tube or semi-conductor device, any manufacturer.	
80207	Unimax Switch, Div. Maxon Electronics Corp.	Wallingford, Conn.
80223	United Transformer Corp.	New York, N.Y.
80248	Oxford Electric Corp.	Chicago, Ill.
80294	Bourns Inc.	Riverside, Cal.
80411	Arco Div. of Robertshaw Controls Co.	Columbus, Ohio
80486	All Star Products Inc.	Defiance, Ohio
80509	Avery Label Co.	Monrovia, Cal.
80583	Hammarlund Co., Inc.	Mars Hill, N.C.
80640	Stevens, Arnold, Co., Inc.	Boston, Mass.
80813	Dimco Gray Co.	Dayton, Ohio
81030	International Inst. Inc.	Orange, Conn.
81073	Grayhill Co.	LaGrange, Ill.
81095	Triad Transformer Corp.	Venice, Cal.
81312	Winchester Elec. Div. Litton Ind., Inc.	Oakville, Conn.
81349	Military Specification	
81483	International Rectifier Corp.	El Segundo, Cal.
81541	Airpax Electronics, Inc.	Cambridge, Maryland
81860	Barry Controls, Div. Barry Wright Corp.	Watertown, Mass.
82042	Carter Precision Electric Co.	Skokie, Ill.
82047	Sperti Faraday Inc., Copper Hewitt Electric Div.	Hoboken, N.J.
82116	Electric Regulator Corp.	Norwalk, Conn.
82142	Jeffers Electronics Division of Speer Carbon Co.	Du Bois, Pa.
82170	Fairchild Camera & Inst. Corp., Space & Defense Systems Div.	Paramus, N.J.
82209	Magurie Industries, Inc.	Greenwich, Conn.
82219	Sylvania Electric Prod., Inc. Electronic Tube Division	Emporium, Pa.
82376	Astron Corp.	East Newark, Harrison, N.J.
82389	Switchcraft, Inc.	Chicago, Ill.
82647	Metals & Controls Inc., Spencer Products	Attleboro, Mass.
82768	Phillips-Advance Control Co.	Joliet, Ill.
82866	Research Products Corp.	Madison, Wis.
82877	Rolton Mfg. Co., Inc.	Woodstock, N.Y.
82893	Vector Electronic Co.	Glendale, Cal.
83058	Carr Fastener Co.	Cambridge, Mass.
83086	New Hampshire Ball Bearing, Inc.	Peterborough, N.H.
83125	General Instrument Corp., Capacitor Div.	Darlington, S.C.
83148	ITT Wire and Cable Div.	Los Angeles, Cal.
83186	Victory Eng. Corp.	Springfield, N.J.
83298	Bendix Corp., Red Bank Div.	Red Bank, N.J.
83315	Hubbell Corp.	Mundelein, Ill.
83324	Rosan Inc.	Newport Beach, Cal.
83330	Smith, Herman H., Inc.	Brooklyn, N.Y.
83332	Tech Labs	Palisades Park, N.J.
83385	Central Screw Co.	Chicago, Ill.
83501	Gavitt Wire and Cable Co., Div. of Amerace Corp.	Brookfield, Mass.
83594	Burroughs Corp., Electronic Tube Div.	Plainfield, N.J.
83740	Union Carbide Corp., Consumer Prod. Div.	New York, N.Y.
83777	Model Eng. and Mfg., Inc.	Huntington, Ind.
83821	Loyd Scruggs Co.	Festus, Mo.
83942	Aeronautical Inst. & Radio Co.	Lodi, N.J.
84171	Arco Electronics Inc.	Great Neck, N.Y.
84396	A.J. Glesener Co., Inc.	San Francisco, Cal.
84411	TRW Capacitor Div.	Ogallala, Neb.

APPENDIX C

CODE LIST OF MANUFACTURERS (Continued)

Code No.	Manufacturer	Address
94870	Sarkes Tarzian, Inc.	Bloomington, Ind.
85454	Boonton Molding Company	Boonton, N.J.
85471	A. B. Boyd Co.	San Francisco, Cal.
85474	R. M. Bracamonte & Co.	San Francisco, Cal.
85660	Koiled Kords, Inc.	Hamden, Conn.
85911	Seamless Rubber Co.	Chicago, Ill.
86174	Fafnir Bearing Co.	Los Angeles, Calif.
86197	Clifton Precision Products Co., Inc.	Clifton Heights, Pa.
86579	Precision Rubber Products Corp.	Daytos, Ohio
86684	Radio Corp. of America, Electronic Comp. & Devices Division	Harrison, N.J.
86928	Seastrom Mfg. Co.	Glendale, Cal.
87034	Marco Industries	Anaheim, Cal.
87216	Philco Corporation (Lansdale Division)	Lansdale, Pa.
87473	Western Fibrous Glass Products Co.	San Francisco, Cal.
87664	Van Waters & Rogers Inc.	San Francisco, Cal.
87930	Tower Mfg. Corp.	Providence, R.I.
88140	Cutler-Hammer, Inc.	Lincoln, Ill.
88220	Gould-National Batteries, Inc.	St. Paul, Minn.
88698	General Mills, Inc.	Buffalo, N.Y.
89231	Graybar Electric Co.	Oakland, Cal.
89473	G. E. Distributing Corp.	Schenectady, N.Y.
89479	Security Co.	Detroit, Mich.
89665	United Transformer Co.	Chicago, Ill.
90030	United Shoe Machinery Corp.	Beverly, Mass.
90179	U.S. Rubber Co., Consumer Ind. & Plastics Prod. Div.	Passaic, N.J.
90365	Belleville Speciality Tool Mfg., Inc.	Belleville, Ill.
90763	United Carr Fastener Corp.	Chicago, Ill.
90970	Bearing Engineering Co.	San Francisco, Cal.
91146	ITT Cannon Elect. Inc., Salem Div.	Salem, Mass.
81260	Connor Spring Mfg. Co.	San Francisco, Cal.
91345	Miller Dial & Nameplate Co.	El Monte, Cal.
91418	Radio Materials Co.	Chicago, Ill.
91506	Augat Inc.	Attleboro, Mass.
91637	Dale Electronics, Inc.	Columbus, Nebr.
91662	Elco Corp.	Willow Grove, Pa.
91673	Epiphone Inc.	New York, N.Y.
91737	Gremar Mfg. Co., Inc.	Wakefield, Mass.
91827	K F Development Co.	Redwood City, Cal.
91886	Malco Mfg., Inc.	Chicago, Ill.
91929	Honeywell Inc., Micro Switch Division	Freeport, Ill.
91961	Nalm-Bros. Spring Co.	Oakland, Cal.
92180	Tru-Connector Corp.	Peabody, Mass.
92367	Elgeet Optical Co., Inc.	Rochester, N.Y.
92607	Tensolite Insulated Wire Co., Inc.	Tarrytown, N.Y.
92702	IMC Magnetics Corp.	Westbury, L.I., N.Y.
92966	Hudson Lamp Co.	Kearney, N.J.
93332	Sylvania Electric Prod. Inc., Semiconductor Div.	Woburn, Mass.
93369	Robbins & Myers Inc.	Pallisades Park, N.J.
93410	Stemco Controls, Div. of Essex Wire Corp.	Mansfield, Ohio
93632	Waters Mfg. Co.	Culver City, Cal.
93929	G.V. Controls	Livingston, N.J.
94137	General Cable Corp.	Bayonne, N.J.
94144	Raytheon Co., Comp. Div., Ind. Comp. Operations	Quincy, Mass.
94148	Scientific Electronics Products, Inc.	Loveland, Colo.
94154	Wagner Elect. Corp., Tung-Sol Div.	Newark, N.J.
94197	Curtiss-Wright Corp., Electronics Div.	East Patterson, N.J.
94222	South Chester Corp.	Chester, Pa.
94330	Wire Cloth Products, Inc.	Bellwood, Ill.
94375	Automatic Metal Products Co.	Brooklyn, N.Y.
94682	Worcester Pressed Aluminum Corp.	Worcester, Mass.
94896	Magnecraft Electric Co.	Chicago, Ill.
95023	George A. Philbrick Researchers, Inc.	Boston, Mass.
95146	Alco Elect. Mfg. Co.	Lawrence, Mass.
95236	Allied Products Corp.	Diania, Fla.
95238	Continental Connector Corp.	Woodside, N.Y.
95263	Leecraft Mfg. Co., Inc.	Long Island, N.Y.
95265	National Coil Co.	Sheridan, Wyo.
95275	Vitramon, Inc.	Bridgeport, Conn.
95348	Gordos Corp.	Bloomfield, N.J.
95354	Methode Mfg. Co.	Rolling Meadows, Ill.
95566	Arnold Engineering Co.	Marengo, Ill.
95712	Dage Electric Co., Inc.	Franklin, Ind.
95984	Slemon Mfg. Co.	Wayne, Ill.
95987	Weckesser Co.	Chicago, Ill.
96067	Microwave Assoc., West, Inc.	Sunnyvale, Cal.
96095	Hi-Q Div. of Aerovox Corp.	Olean, N.Y.
96256	Thordarson-Meissner Inc.	Mt. Carmel, Ill.
96296	Solar Mfg. Co.	Los Angeles, Cal.
96396	Microswitch, Div. of Minn.-Honeywell	Freeport, Ill.
96330	Carlton Screw Co.	Chicago, Ill.
96341	Microwave Associates, Inc.	Burlington, Mass.
96501	Excel Transformer Co.	Oakland, Cal.
96508	Xcelite, Inc.	Orchard Park, N.Y.
96733	San Fernando Elec. Mfg. Co.	San Fernando, Cal.
96881	Thomson Ind. Inc.	Long Island, N.Y.
97464	Industrial Retaining Ring Co.	Irvington, N.J.
97539	Automatic & Precision Mfg.	Englewood, N.J.
97979	Reon Resistor Corp.	Yonkers, N.Y.
97983	Litton System Inc., Adler-Westrex Commun. Div.	New Rochelle, N.Y.
98141	R-Tronics, Inc.	Jamaica, N.Y.
98159	Rubber Teck, Inc.	Cardena, Cal.
98220	Hewlett-Packard Co., Medical Elec. Div.	Pasadena, Cal.
98278	Microdot, Inc.	So. Pasadena, Cal.
98291	Sealectro Corp.	Mamaronech, N.Y.
98376	Zero Mfg. Co.	Burbank, Cal.
98410	Etc Inc.	Cleveland, Ohio
98731	General Mills Inc., Electronics Div.	Minneapolis, Minn.
98734	Paseo Division of Hewlett-Packard Co.	Palo Alto, Cal.
98821	North Hills Electronics, Inc.	Glen Cove, N.Y.
98978	International Electronic Research Corp.	Burbank, Cal.
99109	Columbia Technical Corp.	New York, N.Y.
99313	Varian Associates	Palo Alto, Cal.
99378	Atlee Corp.	Winchester, Mass.
99515	Marshall Ind., Capacitor Div.	Monrovia, Cal.
99707	Control Switch Division, Controls Co. of America	El Segundo, Cal.
99800	Delevan Electronics Corp.	East Aurora, N.Y.
99848	Wilco Corporation	Indianapolis, Ind.
99928	Branson Corp.	Whippany, N.J.
99934	Rembrandt, Inc.	Boston, Mass.
99942	Hoffman Electronics Corp., Semiconductor Division	El Monte, Cal.
99957	Technology-Instrument Corp. of California	Newbury Park, Cal.

The following HP Vendors have no number assigned in the latest supplement to the Federal Supply Code for Manufacturers Handbook.

0000F	Malco Tool and Die	Los Angeles, Calif.
0000Z	Willow Leather Products Corp.	Newark, N.J.
000AB	ETA	England
000BB	Precision Instrument Comp. Co.	Van Nuys, Cal.
000CS	Hewlett-Packard Co., Colorado Springs Div.	Colorado Springs, Colorado
000MM	Rubber Eng. & Development	Hayward, Cal.
000NN	A "N" D Mfg. Co.	San Jose, Cal.
000QQ	Cooltron	Oakland, Cal.
000WW	California Eastern Lab	Burlington, Cal.
000YY	S.K. Smith Co.	Los Angeles, Cal.

SUPPLEMENTAL CODE LIST OF MANUFACTURERS

Code No.	Manufacturer	Address
00LNL	Insulectro	Burlingame, California
00LNM	IRC	Boulder, Colorado
00LNN	J. C. Penney Co.	Loveland, Colorado
00LNO	Joyner's	Osseo, Minnesota
00LNP	J. S. Bennett	Denver, Colorado
00LNQ	Lamps, Inc.	Littleton, Colorado
00LNR	Micro-Switch	Englewood, Colorado
00LNS	Mid-Continental Tool	North Kansas City, Missouri
00LNT	Newark	Denver, Colorado
00LNU	Otto Heil, ohg.	Germany
00LNV	Peters De Laet, Inc.	Burlingame, California
00LNA	A & 1 Bolt Co	Denver, Colorado
00LNB	Bearing Chain & Supply	Dallas, Texas
00LNC	Bearing Service & Supply	Denver, Colorado
00LND	Bell Screw Co.	Elk Grove Village, Illinois
00LNE	Borden, Inc.	
00LNF	Cal-Micro	San Jose, California
00LNG	Cocks-Clark	Denver, Colorado
00LNH	Electronic Parts	Denver, Colorado
00LNI	Fujiaku	Japan
00LNJ	Hyer Electric	Denver, Colorado
00LNK	Intertechnical Group	Denver, Colorado
00LNW	Plastic Fabricators	Hamden, Connecticut
00LNX	R.C.A.	Denver, Colorado
00LNY	Rocket Seal Co.	Englewood, Colorado
00LNZ	Rocky Mtn. Bearing	Longmont, Colorado
00LOA	Ryall Electric	Denver, Colorado
00LOB	Sherwin Williams	Loveland, Colorado
00LOC	Sloss & Brittain	San Francisco, California
00LOD	Sorenson Eng. Co.	Yucaipa, California
00LOE	Styro Molders	Colorado Springs, Colorado
00LOF	Waco	Denver, Colorado
00LOG	Workshop for Electronics	Loveland, Colorado

00015-49
Revised: May, 1970

From: Handbook Supplements
H4-1 Dated January 1970