HEWLETT® PACKARD

Parallel Interface

Technical Data

For HP 1000 A-Series Computer Systems Product Number HP 12006A

The HP 12006A is a multipurpose interface for 8- or 16-bit bidirectional data transfers between external devices and HP 1000 A-Series Computers and Systems.

Features

- TTL (+5 V) and +12 V interface compatibility
- Wide choice of programmable operating modes for easy use with instrumentation
- Separate 16-bit input and output storage registers
- Built-in DMA capability offering maximum data rates to 850 K words per second on inputs and 730 K words per second on outputs
- 8- or 16-bit operation with hardware packing of bytes into or from words
- Pin compatibility with HP 12566B/C interface used in other HP 1000 computers and systems

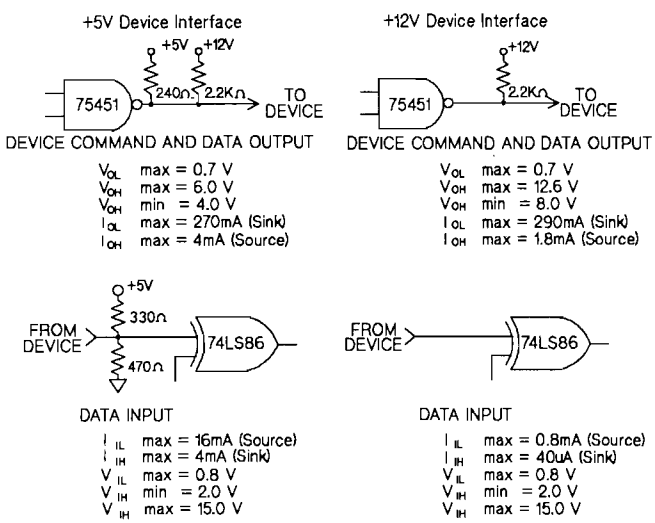

Functional Specifications

Data Transfer

Protocol: Transfers either 8 or 16 parallel bits at a time

High Logic Level Choices: TTL (+5 volt) is standard; removal of six resistor packages converts the interface to +12 volt level.

Byte Packing: For use with 8-bit devices, such as tape readers, tape punches, and some line printers, the interface may be programmed to automatically pack/unpack bytes into/from 16-bit computer words.

Device Command Sense Selection: The interface can be set to respond to either high-true to low-true device commands from the interfaced device for card/device synchronization.

Maximum Rate: The following transfer rates can be attained in a quiescent RTE-A environment with the HP 12006A interface in the highest priority position.

Input	Output
A600+ 850 K words/s	730 K words/s
A700 790 K words/s	650 K words/s
A900 740 K words/s,	500 K words/s

Typical CPU-to-CPU transfer rates will be less than 50% of the output rate.

Logic Levels and Circuits

Clocked Mode: The parallel interface supports a clocked mode in which data transfers to/from external devices are synchronized by a flag-to-device handshake that is clocked by the external device.

Transparent (asynchronous) Mode: The parallel interface can also be used to send data to or receive data from one or several devices, such as indicators or switches, that do not provide or use any type of clocking signal. Information is output to the destination devices exclusively under program control and input information may be read at any time.

Control and Status Bit Communication

Control Output: Four control bits may be sent to the interfaced device via an output control word for use as control, command, or address bits. For instance, they can be decoded to address any of 16 device registers or actions, or to address any of 16 devices connected to the same parallel interface.

Status Input: Four status bits may be received from the interfaced device via an input control word.

Direct Memory Access (DMA) Operation

DMA Accessibility: The HP 12006A can access memory under control of its I/O master processor, regardless of how many other interfaces in the system are also accessing memory via DMA.

Self-Configured, Chained DMA Mode: The I/O master processor on the HP 12006A interface supports a self-configuring mode of operation. In this mode, instead of interrupting the central process or after a block transfer, the I/O processor fetches a new set of control words for the next transfer. This process continues as long as additional sets of control words are available. Chained DMA transfer is particularly useful for storing several sequential scans of measurement channels from an instrumentation subsystem into memory, which can be accomplished without interrupting computations or other processing by the central processor.

Configuration Information

Computer and System Compatibility: The HP 12006A Parallel Interface is compatible with all HP 1000 A-Series computers and systems.

Connector Compatibility: The HP 12006A interface printed circuit cable connector is pin-compatible with the HP 12566B/C Microcircuit Interface, permitting direct substitution of an HP 1000 A-Series computer or system with the HP 12006A interface for an HP 1000 M/E/F-Series with HP 12566B/C interface.

Software Support: The HP 12006A interface is supported by RTE-A interface driver ID.5O.

Diagnostic Support: A diagnostic and a test hood for the HP 12006A interface are provided in the HP 24612A Diagnostic Package.

Installation: Set device command sense switch to appropriate level; set the interface's I/O address on the select code switches; turn off power to the computer and interfaced device; plug the interface into the computer backplane; connect an appropriate cable from the interface to the device; and integrate the interface driver into the operating system if that has not been accomplished previously.

Note: The I/O address setting of the interface select code switches is independent of the interface card's position in the computer backplane.

Electrical Specifications

Direct Current Requirements: Configured as a +5 V device interface: +5 V at 1.94 A; +12 V at 179 mA. Configured as a +12 V device interface: +5 V at 1.61 A; +12 V at 175 mA

Physical Characteristics

Dimensions: 28.9 cm long by 17.2 cm wide by 0.2 cm board thickness (11.4 in by 6.75 in by 0.06 in) with 1.0 cm (0.4 in) top-of-board parts clearance and 0.5cm (0.2 in) beneath-board clearance

Weight: 370 grams (13 oz) with mating connector

Ordering Information

The HP 12006A includes:

12006-60003 Parallel Interface Card
5061-3426 48-pin Connector Kit
12006-90001 Reference Manual

Technical information in this document is subject to change without notice.

Printed in the U.S.A.